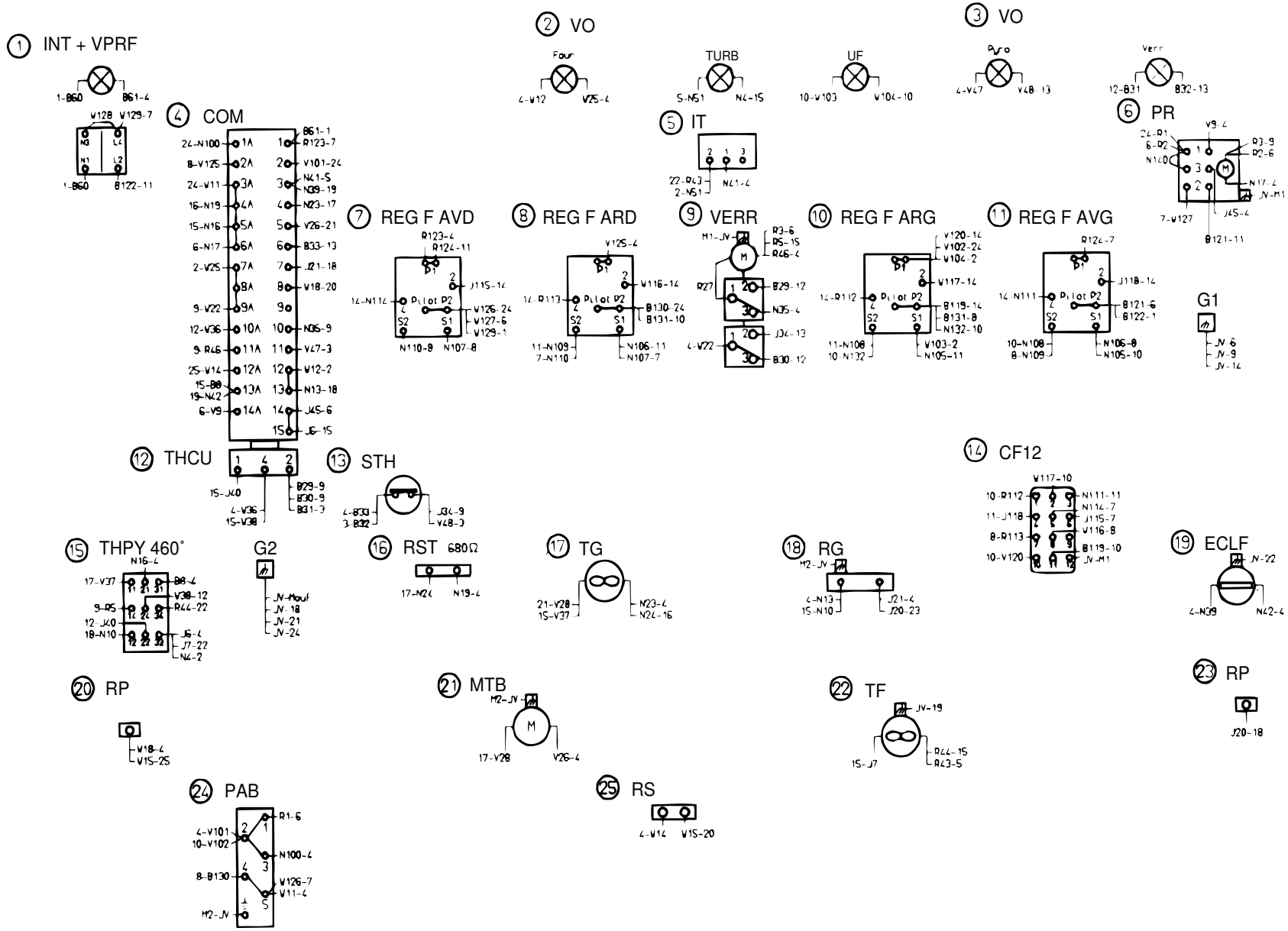
1 INT + VPRF
1-B60
B61-4
W128 V129-7
1-B60
B122-11
2 VO
Four
4-V12
V25-4
TURB
5-N51
N4-15
UF
10-W103
W104-10
3 VO
Pro
4-V47
V48-13
Verr
12-B31
B32-13
4 COM
24-N100
B-V125
24-V11
16-N19
15-N16
6-N17
2-V25
9-V22
12-V36
9-R46
25-V14
15-B8
19-N42
6-V9
B61-1
R123-7
V101-24
N41-5
N39-19
N23-17
V26-21
B33-13
J21-18
V18-20
N35-9
V47-3
V12-2
N13-18
J45-6
J6-15
5 IT
22-R43
2-N51
N41-4
6 PR
V9-4
24-R1
6-R2
N140
R3-9
R2-6
N17-4
JV-M1
7-V127
J45-4
B121-11
7 REG F AVD
R123-4
R124-11
J115-14
14-N114
Pilot P2
V126-24
V127-6
V129-1
N110-8
N107-8
8 REG F ARD
V125-4
V116-14
14-R113
Pilot P2
B130-24
B131-10
11-N109
7-N110
N106-11
N107-7
9 VERR
M1-JV
R3-6
R5-15
R46-4
M
R27
B29-12
N35-4
J34-13
4-V22
B30-12
10 REG F ARG
V120-14
V102-24
V104-2
V117-14
14-R112
Pilot P2
B119-14
B131-8
N132-10
11-N108
10-N132
V103-2
N105-11
11 REG F AVG
R124-7
J118-14
14-N111
Pilot P2
B121-6
B122-1
10-N108
8-N109
N106-8
N105-10
G1
JV-6
JV-9
JV-14
12 THCU
15-J40
4-V36
15-V38
B29-9
B30-9
B31-3
13 STH
4-B33
3-B32
J34-9
V48-3
14 CF12
V117-10
10-R112
11-J118
8-R113
10-V120
N111-11
N114-7
J115-7
V116-8
B119-10
JV-M1
15 THPY 460°
N16-4
17-V37
9-R5
12-J40
18-N10
B8-4
V38-12
R44-22
J6-4
J7-22
N4-2
G2
JV-Mouf
JV-18
JV-21
JV-24
16 RST 680Ω
17-N24
N19-4
17 TG
21-V28
15-V37
N23-4
N24-16
18 RG
M2-JV
4-N13
15-N10
J21-4
J20-23
19 ECLF
JV-22
4-N39
N42-4
20 RP
V18-4
V15-25
21 MTB
M2-JV
M
17-V28
V26-4
22 TF
JV-19
15-J7
R44-15
R43-5
23 RP
J20-18
24 PAB
4-V101
10-V102
8-B130
M2-JV
R1-6
N100-4
V126-7
V11-4
25 RS
4-W14
W15-20