Belling FW612 Whi

Washing Machine User Manual

Contents

1 Safety information

Safety information 3

2 Getting to know your washing machine

Ready? Let's begin 5

Accessories 7

3 Installing your washing machine

Installation requirements 8

Unpacking 8

Connections (electrical, water, gas) 9

4 Functions

Functions 11

5 Using your washing machine

First use of washing machine 15

Quick start 18

6 Care and Maintenance

Cleaning 19

Technical specifications 21

7 Product support

Troubleshooting 22

Declaration of conformance to product standards 23

Disposal 23

1 ⚠ Safety information

Important - Please read these instructions fully before installing or operating

- If the supply cord is damaged,it must be replaced by the manufacturer,its service agent or similarly qualified persons in order to avoid a hazard.
- The new hose-sets supplied with the appliance are to be used and that old hose-sets should not be reused.
- This washing machine is for indoor use only.
- The openings must not be obstructed by a carpet.
- This appliance can be used by children aged from 8 years and above and persons with reduced physical,sensory or mental capabilities or lack of experience and knowledge if they have been given supervision or instruction concerning use of the appliance in a safeway and understand the hazards involved.
  Cleaning and maintenance shall not be made by children without supervision.
- This appliance is not intended for use by persons (including children) with reduced physical, sensory or mental capabilities, or lack of experience and knowledge, unless they have been given supervision or instruction concerning use of the appliance by a person responsible for their safety.
- Pull out its plug from the power socket before cleaning or maintenance.
- Make sure that all pockets are emptied before putting them into this machine, Shape and rigid items, such as icons, nails,screws or stones etc. may cause serious damage.
- Please check whether the water inside the drum has been drained before opening its door.Please do not open the door if there is any water visible.
- Pls keep the door closed when not in use to prevent pets and children climbing into the machine, always check the machine before every operation.
- Glass door may be very hot during the operation.Keep children and pets far away from the machine during the operation.
- Ensure that the installed power vltage frequency match those of washing machine.
- Do not use any socket with rated current less than that of washing machine.Never pull out power plug with wet hands.
- To ensure your safety the plug must be inserted into an earthed three-pole socket. Check carefully and make sure that your socket is correctly earthed.

Safety information

Important - Please read these instructions fully before installing or operating

- Children of less than 3 years should be kept away unless continously supervised.
- Do not let kids play with the machine.
- Packing materials may be dangerous to the children . Please keep all packing materials (plastic bags,foams etc) far away from the children.
- Washing machine should not be installed in bathrooms, wet rooms or rooms with explosive or caustic gases.
- Make sure that the water and electrical devices are connected by a qualified technician in accordance with the manufacturer's instructions and local safety regulations.
- Before operating this machine please all packaging and transport bolts must be removed, otherwise serious damage may occur.
- Before washing any clothes, please run your first washing process empty with detergent under the "Cottons 90℃" program.
- The washing machine with single inlet valve only can be connected to the cold water supply. The washing machine with double inlet valves can be connected to the hot water and cold water supply.
- Your washing machine is only for home use and is only designed for the textiles suitable for machine washing.
- Flammable and explosive or toxic solvents are forbidden.Gasoline and alcohol etc.Shall not be used as detergents.Please only select the detergents suitable for machine washing, especially for drum. It is forbidden to wash carpets.
- Be careful of burning when washing machine drains hot washing water. Never refill the water by hand during washing.
- After the program is completed, Please wait for two minutes to open the door.
- If the appliance is not to be used for a prolonged period of time please unplug the appliance and isolate the. water supply.
- Do not climb up and sit on top cover of the machine. Do not lean against against machine door.
- Please do not close the door with excessive forces.If it is found difficult to close the door,please check if the excessive clothes are put in or distributed well.
- The household washing machine "isn't intended to be built-in.
- Cautions during moving/Re-positing the Machine
  1.Transport bolts shall be reinstalled to the machine by a specialized person.
  2.Any excess water should be drained out of the machine.
  3. Handle the machine carefully, the machine door cannot be used as lifting handle.
- Never hold each protruded part on the machine while lifting. Machine door can not be used as the handle during the conveyance.

2 Getting to know your washing machine

You'll be up and running in no time

Ready? Let's begin...

Please read these instructions carefully. They contain important information which will help you get the best from your washing machine and ensure safe and correct installation and operation.
If you require any further assistance, our technical experts are happy to help. For full details, refer to the product support section at the end of these instructions.

Getting to know your washing machine

You'll be up and running in no time

Component

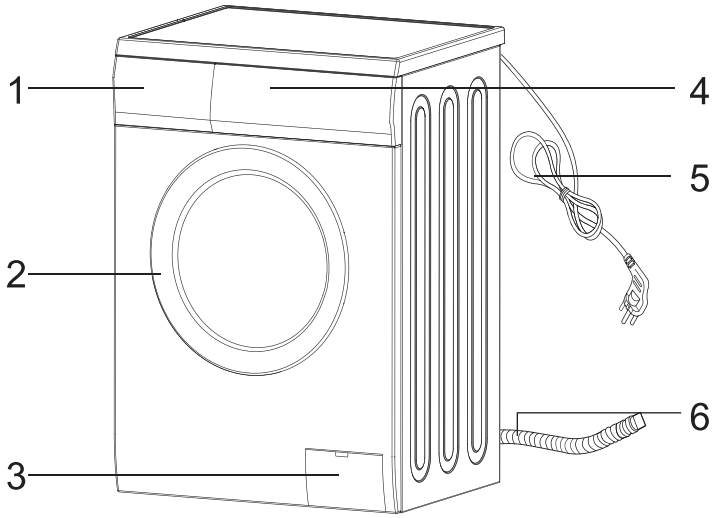

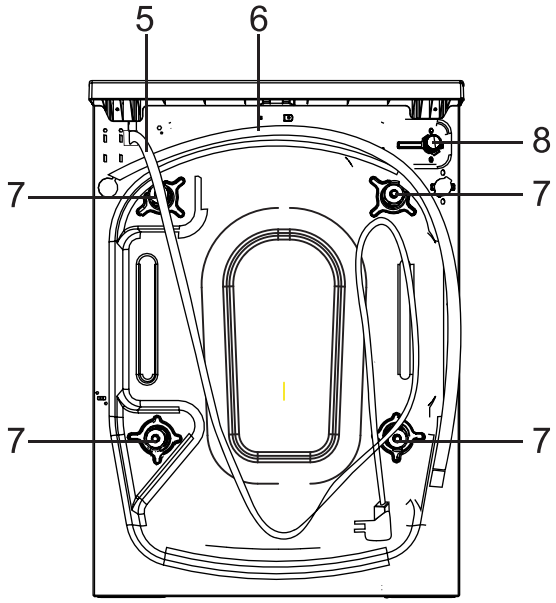

1.Detergent Drawer

2.Door

3.Filter

4.Control Panel

5.Power lead

6.Drain hose

7.Transport bolt x 4

8.Water inlet

Getting to know your washing machine

You'll be up and running in no time

Model	capacity	Spin Speed	Energy class
Belling FW612 Whi	6kg	1200rpm	A++

Accessories

This machine includes below accessories,please install these parts by yourself before operating.

- plastic hole plug x 4
- Inlet hose
- Drain hose support

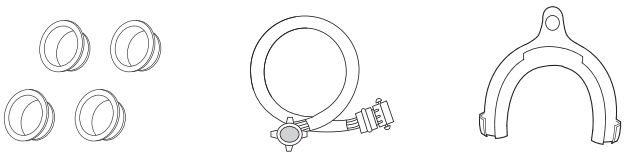

Tools

You may use this tools to help install above parts

- glove
- spanner

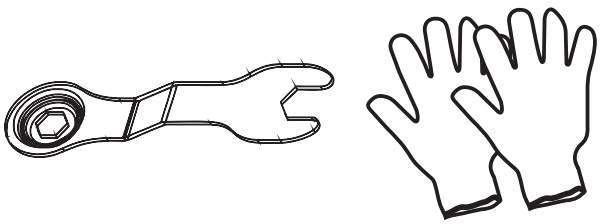

3 Installing your washing machine

Bringing it all together

Installation requirements

- In addition to the instructions mentioned here, special regulations of the relevant water and companies may apply. If in doubt, have the washing machine connected by a qualified technician.
- The washing machine is heavy - caution when lifting it.
- Do not lift by projecting components (e.g. washing machine door).
- Warning: Frozen hoses may tear/burst. Do not install washing machine in outdoor areas or where there is a risk of frost.Please operate washing machine above 0℃.
- Lay hoses and cables in such a way that there is no risk of tripping over them.

⚠ An additional space (approximately 120mm) is required at the rear of the washing machine. This is to allow enough space for the water hose and drain hose connections.

Unpacking

Unpacking your washing machine

Caution:2 people are required to unpack the washing machine,it is recommended that gloves are worn.

Carefully remove all packing materials including the foam base, dispose of correctly.

Note:When opened,water droplets may be visible in the drum etc. this is normal as each appliance is tested before delivery.

Removing the transport bolts

Important:The transport bolts are designed to support the internal components during transit these MUST be removed before use.

1:Loosen the screws by rotating counterclockwise with a suiltable wrench,(Fig 1 2)

2:Remove the bolts by pulling them.(Fig 3)

3:When the transport bolts have been removed, insert the plastic transport screw taps found in the accessories bag into the holes.(Fig 4)

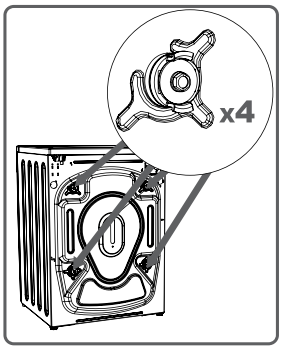

Fig1

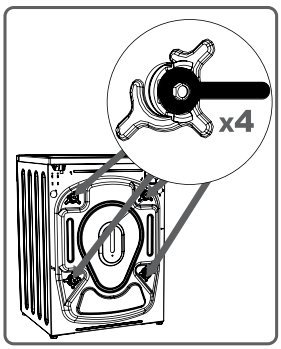

Fig2

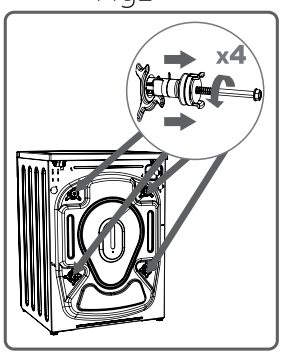

Fig3

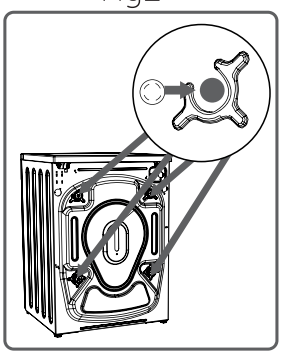

Fig4

Levelling feet

1:For your machine to work efficiently with minimum vibration it should be settled on flat, nonslippery,firm ground.

2:You can adjust the balance of your machine by changing the positioning of its feet.

3:First,loosen the plastic adjustment nut.(Fig 5)

4:Adjust by rotating the feet upwards or downwards.(Fig 6)

5:After the desired position has been reached, tighten the plastic adjustment nut again by rotating it upwards.

Note:Never put cartons,wooden blocks or similar materials under the machine to balance irregularities in the level of the ground.

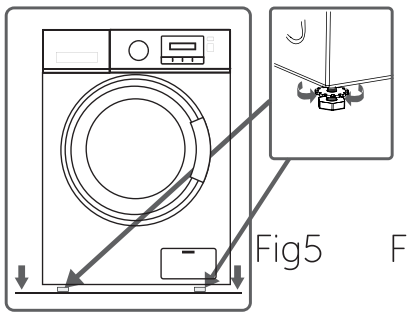

Fig5

Fig6

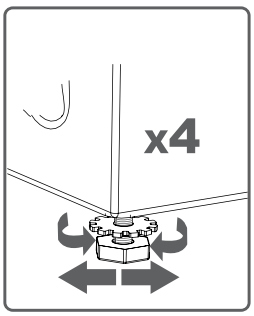

Installing your washing machine

Bringing it all together

Connections

Water inlet hose connections

Important:This washing machine MUST only be connected to a cold water supply.

1:Connect the water inlet hose,the angled connection attaches to the water inlet on the back of the washing machine.(Fig 7)

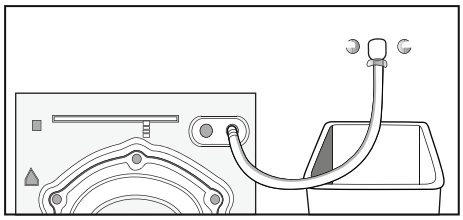

Fig7

2:The straight connection attaches to the water supply valve.(Fig 8)

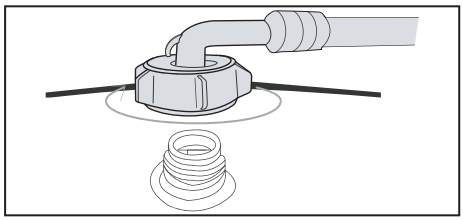

Fig8

3:Ensure all seals are in place before connecting.

Important:Only tighten the hose connection nut by hand - do not overtighten.

Drain hose connections

Important:The height of the top of the curve in the drain hose MUST be between 60 - 100cm from the floor.(Fig 9)

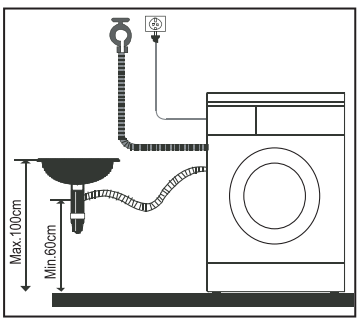

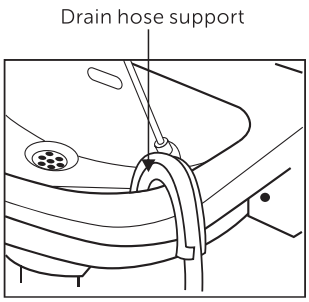

Draining to a wash-basin

Fig9

Drain hose can be fitted to the drainer or a wash basin.

Electrical

Any electrical work that is required to install this appliance MUST be carried out by a qualified electrician.

Warning:THIS APPLIANCE MUST BE EARTHED

Before making any electrical connections, ensure that:

- Electrical safety is only guaranteed when the earth system of your house is in accordance with the related local regulations.
- Do not bend, stretch or pull the supply cable to avoid electric shock.
- Ensure the power socket is suiable for the maximum power of the machine (fuses in the power circuit must be 13 amp).
- The supply voltage should be the same as that indicated in the technical specifications and the applicance rating plate.
- The appliance should be earthed and in complicance with the applicable law.
- When installed,the power socket must be within easy reach.
- If the socket outlets in your home are not suitable for the plug supplied with this unit check with a qualified electrician for replacement.
- To avoid the risk of overloading your plug socket, the use of adapters, multiple connectors or extension cables are not recommended.
- The applicance must be connected to a 220-240 volt 50Hz AC supply by means of a three pin socket, suitably earthed and protected by a 13 amp fuse.
- Should the fuse need to be replaced , a 13 amp fuse approved to BS 1362/A must be used.
- The plug contains a removable fuse cover that must be refitted when the fuse is replaced. if the fuse cover is lost or damaged, the plug must not be used until a replacement cover has been fitted or the plug is replaced.
- A damaged plug should be cut off as close to the plug body as possible , the fuse should be removed and the plug disposed of safely.

Installing your washing machine

Bringing it all together

Plug replacement (UK & Ireland only)

Should you need to replace the plug;the wires in the power cable are coloured in the following way:

Blue - Neutral ' N'

Brown - Live ' L'

Green & Yellow - Earth 'E'

As the colour of the wires in the power cable may not correspond with the coloured markings identifying the terminals in your plug,and proceed as follows(Fig10):

The green & yellow wire must be connected to the terminal in the plug that is marked with the letter E or by the earth symbol.

The blue wire must be connected to the terminal that is marked with the letter N.

The brown wire must be connected to the terminal that is marked with the letter L.

If power supply cord is damaged , it must replaced by the manufacturer or its service agent or a similar qualified person in order to avoid a hazard.

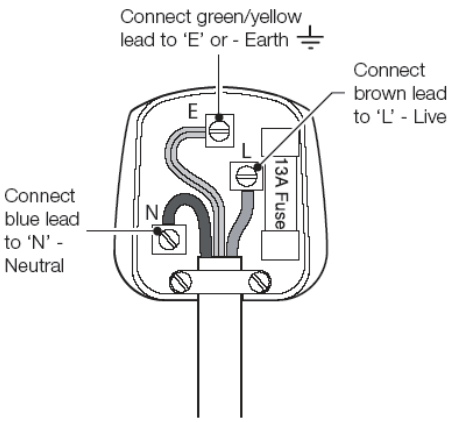

Fig10

4 Functions

Simple everyday use

Introduction of control panel

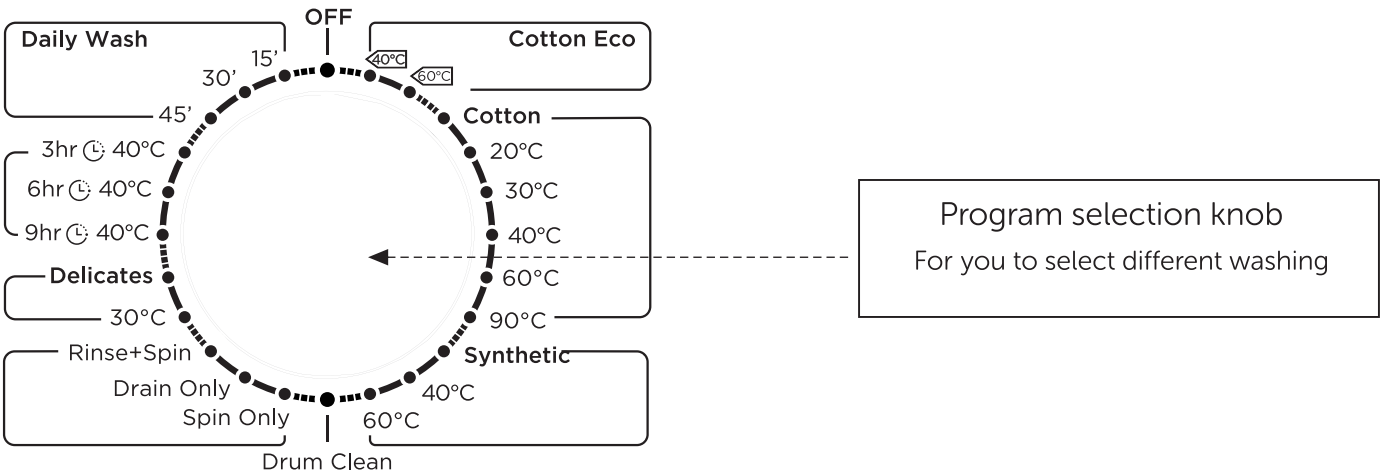

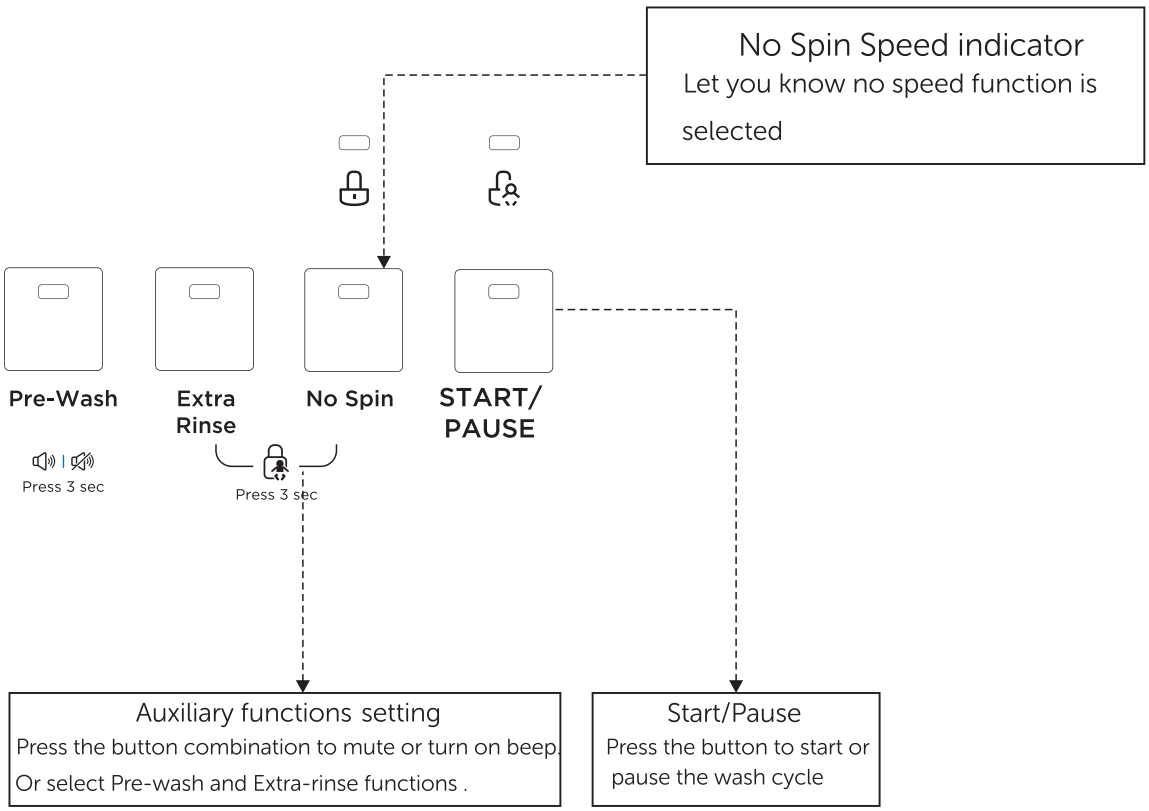

Functions

Simple everyday use

Introduction of control panel

Turning the machine on
Plug in your machine. Place the laundry in the machine and add detergent and softener. Press the "on/off" button.

program selection
First, switch the program knob to select suitable program according to the types of textiles.
Second, select a proper temperature by following the care instructions on the clothes.
Last, select the proper spin speed.
Generally, the higher temperature will consume more energy; the higher spin speed will cause more noise.

PLEASE NOTE: to protect the delicate clothes, the lower spin speed shall be selected.
The main washing procedures depend on the types of the clothes to be washed as follows:

Main program
Depending on the type of textile, the following main programs are avaiblable: Each of these main programs comprise of a complete washing process, including washing, rinsing and, if required, spin cycles.

- **Cotton**

Suitable for textiles made of cotton or linen, for example coats, bed sheets, towels, etc.

- **Cotton ECO**

This is the most energy efficient programme to clean all kinds of soiled cotton laundry.

- **Daily wash**

You can select this procedure to wash your daily clothes in 15'/30'/45', it can save your washing time and satisfy your daily wash requirements.
.

- **Synthetic**

You can select this procedure to wash the quite delicate clothes. The procedure is shorter compared with that for cottons and the washing movement is quite gentle.It is recommended to wash synthetic articles, for example: shirts, coats, blending. As for curtains and laced textiles, the procedure “Synthetic ” shall be selected. While washing the knitting textiles, detergent quantity shall be reduced due to its loose string construction and easily forming bubbles.

- **Delicate**

You can select this procedure to wash your delicate clothes. Its washing movement is gentler and spin speed is less compared with the procedure “Synthetic”. It is recommended for the articles to be washed softly.

- **Spin Only**

Separate spin only procedure. Soap water or rinse water shall be drained out before spinning.

- **Rinse&Spin**

Separate Rinse&Spin Procedure.

- **Drain Only**

Separate Drain only Procedure.

- **Drum clean**

This programe aim to clean the drum and tube in 90 Celsius hot water.

- **Ends in 3H/6H/9H**

This program restrict total washing time and delay time in 3H/6H/9H.

Functions

Simple everyday use

Introduction of control panel

Auxiliary function

These functions can be used based on main program, you can press these functions after you chose the main program.
Note: you can't use these functions after the main program started.

- **Prewash**

The indicator of prewash will light up on the display.
The Prewash function can get an extra wash before main wash.

- **Extra Rinse**

The laundry will undergo extra rinse once after you select it.

- **No Spin**

The laundry will not spin if select this function.

- **Child Lock**

To avoid that the washing procedure cannot operate normally due to the mis operation by kids during the washing procedure, you can select this function, In this case, the other buttons except On/Off button can not work, at this state ,the machine power off when press the key on/off. The machine remembers the program child lock and the program during powered off when press the key on/off again.
Press Extra Rinse and No spin together 3 seconds during the running procedure, the buzzer will beep , Start/Pause button as well as the rotary switch are locked. Press the two buttons for 3 seconds together and buzzer will beep to release to locking. But cut off the power supply , the kid's protection is also release to locking. The kid's protection will not be cancelled after all procedures are completed.

- **Suppression of the acoustic signals**

This is an additional buzzer function on your appliance. After deactivating the buzzer function, the buzzer will be closed. After starting the machine, press the "Pre-wash" button for 3 seconds and you will hear a beep, then the buzzer will be closed. To restart the buzzer function, press the "Pre-wash"button again for 3 seconds. The setting will be kept until the next reset.
Warning: After deactivating the buzzer function, the sounds will not be activated any more.
- Bubble Removal Function
Bubble Check Function: Redundant bubbles will occur when there is excessive detergent, which will affect wash and rinse effects. The procedure will check automatically and one bubble removal procedure will be added automatically to remove bubbles when excessive bubbles are checked.

Functions

Simple everyday use

Program Selection Guide - 6kg washing machine(Belling FW612 Whi)

Procedure / Description	Load(kg)	Detergent Box			Default Temp.(℃)	Default Time (H)		Default Speed(rpm)
	6.0	Case I	Case II	Softener Case	6.0	6.0 (50Hz)	6.0 1200	6.0 1200
Cotton Eco 40°C	6.0	×	●	○	40	3:35	3:45	1200
Cotton Eco 60°C	6.0	×	●	○	60	3:52	3:19	1200
Cotton	6.0	○	●	○	0	1:35	1:35	1200
Cotton 20℃	6.0	○	●	○	20	1:19	1:19	1200
Cotton 30℃	6.0	○	●	○	30	1:20	1:20	1200
Cotton 40℃	6.0	○	●	○	40	1:40	1:40	1200
Cotton 60℃	6.0	○	●	○	60	1:45	1:45	1200
Cotton 90℃	6.0	○	●	○	90	2:40	2:40	1200
Synthetic	3.0	○	●	○	0	1:18	1:18	1200
Synthetic 40℃	3.0	○	●	○	40	1:33	1:33	1200
Synthetic 60℃	3.0	○	●	○	60	1:43	1:43	1200
Drum Clean	—	×	×	×	90	1:21	1:21	400
Spin Only	6.0	×	×	×	—	0:12	0:12	1200
Drain Only	—	×	×	×	—	0:01	0:01	0
Rinse & Spin	6.0	×	×	○	—	0:31	0:31	1200
Delicate 30℃	2.5	×	●	○	30	1:00	1:00	600
Delicate	2.5	×	●	○	0	0:55	0:55	600
Ends in 9H	6.0	×	●	○	40	1:13	1:13	1200
Ends in 6H	6.0	×	●	○	40	1:13	1:13	1200
Ends in 3H	6.0	×	●	○	40	1:13	1:13	1200
Daily Wash 45'	2.0	×	●	○	30	0:45	0:45	800
Daily Wash 30'	2.0	×	●	○	20	0:30	0:30	800
Daily Wash 15'	2.0	×	●	○	0	0:15	0:15	800

- Half load for 8.0Kg machine:4.0Kg. - Half load for 9.0Kg machine:4.5Kg.
- Half load for 10.0Kg machine:5.0Kg.

1) Test wash cycle in compliance with directive 2010/30/EU : Set Cotton ECO with temperature of 60C

- This cycle is designed for cotton loads with a normal soil level and is the most efficient in terms of both electricity and water consumption; it should be used for garments which can be washed at 60C. The actual washing temperature may be differ from the indicated value.

2) Test wash cycle in compliance with directive 2010/30/EU : Set Cotton ECO with temperature of 40℃

- This cycle is designed for cotton loads with a normal soil level and is the most efficient in terms of both electricity and water consumption; it should be used for garments which can be washed at 40℃. The actual washing temperature may be differ from the indicated value.

● Means must ○ Means optional × Means not necessary

Note : Water and power consumption and programme duration may differ from the table shown, subject to changes in water pressure, water hardness and temperature, ambient temperature, type and amount of laundry, selection of auxiliary functions, and fluctuations in the supply voltage.

5 Using your washing machine

Getting the most from your appliance

Organising Laundry

- Read the washing label on each garment to help you sort your washing into different loads.
- Sort the laundry by colour, type of fabric and by how soiled it is. This will help you choose the correct programme and temperature for each wash.

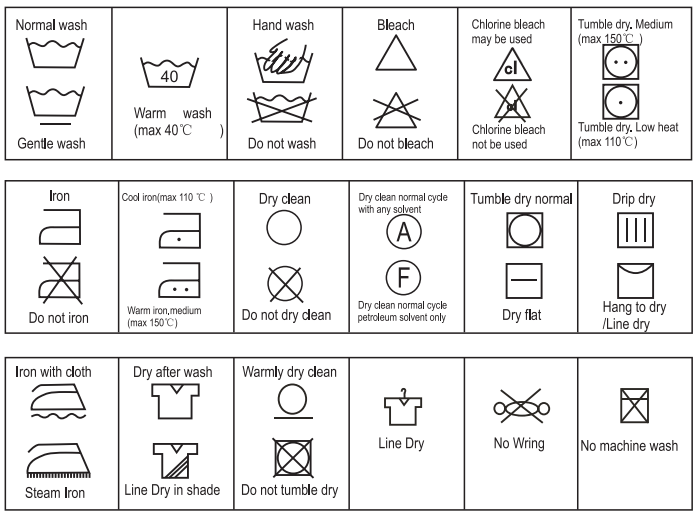

- Do not exceed the maximum load! See the programme selection table for the maximum load for the programme you require.

Fiber Type	Maximum Loading Capacity
	6.0kg
Cotton	6.0kg
Synthetic	3.0kg

Preparing Laundry

- Treat stains before washing.
- Some items should be put into a cleaning net before going into the washing machine. i.e. bras with metal wires, tights and lace clothing to prevent damage.
- Check that pockets do not contain any objects which may damage your clothes and the washing machine.
- Tie up any loose strings on laundry, close zippers and reverse clothing with zips inside out.
- To prevent any large, heavy objects (e.g., buckles, large buttons, etc.) from hitting the glass door, turn your clothing inside out, or remove the heavy objects. These could damage your laundry or the washing machine.
- Remove any surplus hair, animal fur, sand, and other materials with a brush before washing.
- If clothes have raised fabric turn them inside out.
- Clothes that are not colour fast should be washed separately.
- Insert your clothes into the washing machine.
- Close the washing machine door. Ensure that you do not trap any items of clothing between the loading door and the rubber seal.

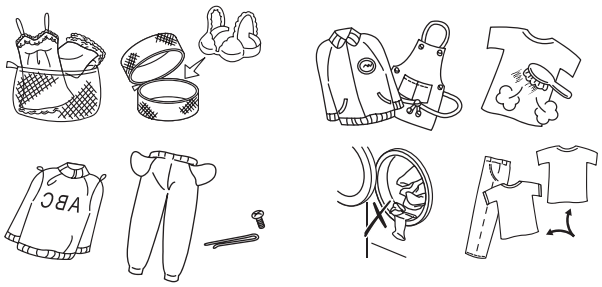

Using your washing machine

Getting the most from your appliance

Adding Detergent and Softener

- Add detergent into the appropriate dispenser.
- Apply softener before you start washing.
- Apply detergent and softener according to the washing amount, the soiling level, the water hardness in your area and the manufacturer's instructions of these products.

Dilute viscous fabric softener and fabric conditioner with water. Prevent blockage of the overflow. Maximum level is 40ml.

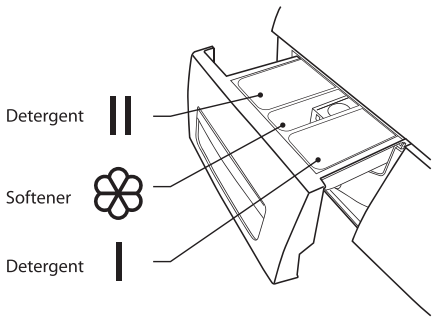

- Do not use the washing machine when the detergent drawer is removed. It may cause a water leak or it may not work normally.
- If you forget to add detergent, you can drain the washing machine by running a drain only programme. Then you can add detergent and start the programme again.
- Detergent only reaches the drum when water flushes through the detergent drawer.
- To prevent powder detergent staying in the drawer, dry the inside of the drawer with a cloth.Make sure the powder isn't lumpy when you add it into the drawer.
- If the rinse cycle isn't removing all the detergent from your wash, use less detergent .
- Softener should not exceed the MAX level in the compartment.
  Wash out unused softener with a splash of water or a damp cloth after the programme has finished.

Before First Use

- Prior to the first use of the appliance, it is recommended to run a wash programme without clothes. A small amount of washing detergent should be used.

Wash Setting

Standard Washing

1. Pull the door handle and put the laundry in the drum. (Refer to Preparation to sort your laundry before it goes into the drum.) Make sure no washing gets caught in the door.
2. Close the door and press the On/Off button.
3. Turn the Programme selection dial to select your wash programme.
4. Select the temperature if desired.
5. Add detergent into the detergent drawer. The quantity of detergent will depend on the amount of laundry, the degree of soiling and the water hardness. Use the amount of detergent suggested on the packaging.
6. Press the Start/Pause button to start the washing.
7. The washing machine will sound when the programme is complete.

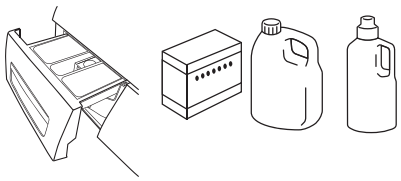

If the door is locked and you switched the washing machine off and then on - or if there's a power cut - it will stay locked for 1 minute.

Using your washing machine

Getting the most from your appliance

Removing Washing (Once programme is fnished)

⚠ Door remains locked for 1 minute after wash stopped.

- Open the washing machine door and remove your washing.
- Remove any foreign objects to avoid risk of rusting.
- Leave the door and detergent drawer open so that residual water can evaporate.

1.Changing the selection after the program started?

If you need to change a setting after the wash has started, press START/PAUSE, select o, then re-select program and optional functions,then press START/PAUSE again.

2.Door lock

The door lock icon will fade out about 2 minutes later after the program end and the door will be allowed to open automatically.

3.End of program

It will sound for 5 seconds after the end of program and the button START/PAUSE will light.

Using your washing machine

Getting the most from your appliance

Quick start

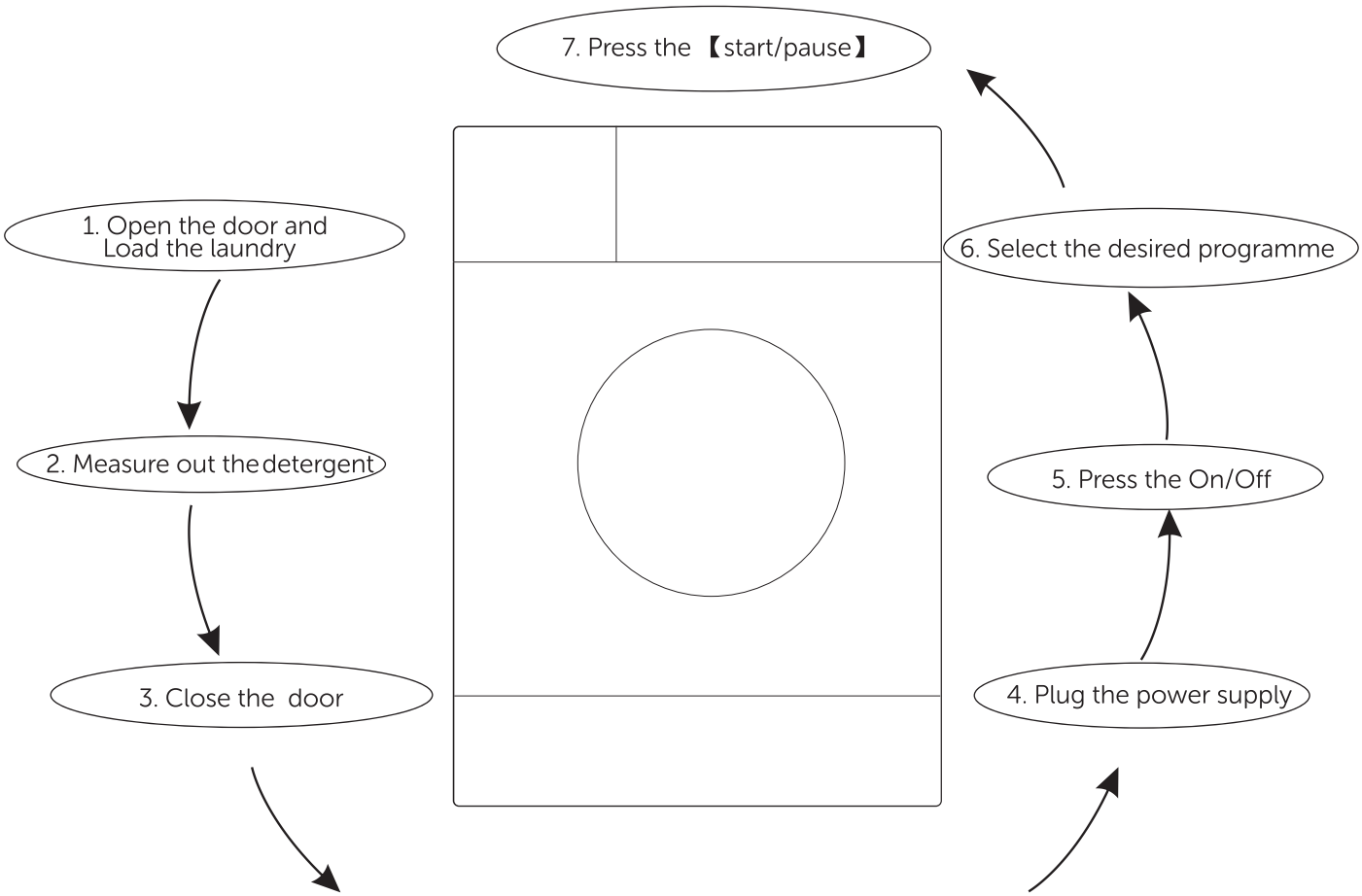

After washing :

1.The washing machine will sound several times for 5 seconds.

2.It is recommend to close the water tap and pull out the power plug.;

6 Care and maintenance

Looking after your appliance

Before your maintenance starts, please do pull out the power plug or disconnect power and close the tap.

⚠

- Do not use solvents clean to avoid that the washing machine, it will damage, and toxic gases are generated or exploded.
- Do not use the detergents containing PCMX to clean the washing machine.

Cleaning and Maintenance of Washing Machine Cabinet

- Proper maintenance on the washing machine can extend its working life. The surface can be cleaned with diluted nonabrasive neutral detergents when necessary. If there is any water overflow, use the wet cloth to wipe it off immediately.
- No sharp items are allowed to strike the cabinet.

Notes: Do not use formic acid and its diluted solvents or equivalent .

Clean Internal Drum

- The rusts left inside the drum by the metal articles shall be removed immediately with chlorine-free detergents.
- Never use steel wool.

Defrost a Frozen Washing Machine

When the temperature drops below zero and your washing machine gets frozen, you may:
1.Disconnect the power supply for the washing machine.
2.Wash the tap with warm water to loosen inlet pipe.
3.Take down inlet pipe and immerse it in warm water.
4.Pour warm water into washing drum and wait for 10 minutes.
5.Reconnect inlet pipe to the tap and check whether inlet and outlet are working normally.
Notes: when the washing machine is reused, make sure the ambient temperature is above 0˚C

Anti-freeze

If your washing machine is located in the room where it can get frozen easily, please drain the remaining water inside drain pipe and inlet pipe thoroughly.

Remove the remaining water in inlet pipe:
1.Close the tap.
2.Screw off the inlet pipe from tap and put its end into the container.
3.Start up any procedure except single Wash or Drain procedure. Water will be drained out of inlet pipe if any for about 40 seconds.
4.Reconnect the inlet pipe to tap.
Remove the remaining water in drain pump(Fig11).

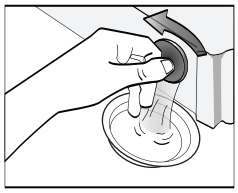

Fig 11

Clean detergent drawer and grooves

1.Press down the arrow location on softener cover inside the drawer.
2.Lift the clip up and take out softener cover and wash all grooves with water.
3.Restore the softener cover and push the drawer into position.

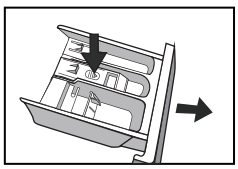

Fig 12

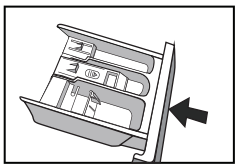

Fig 13

Clean inlet filter

Inlet filter shall must be cleaned if there is not any or insufficient water in when the tap is opened.
Clean the tap filter:
1.Close the tap.
2.Select any procedure except "Wash" or "Drain" procedure.
3.Press the button "Start/Pause" and keep the procedure running for about 40 seconds.
4.Remove the inlet pipe from the tap.
5.Use water to wash the filter.
6.Reconnect the inlet pipe.

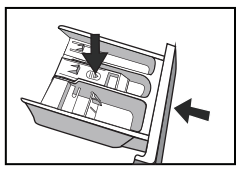

Fig 14

Washing the filter in washing machine:
1.Screw off the inlet pipe from the backside of the machine.
2.Pull out the filter with long nose pliers and reinstall it back after being washed.
3.Reconnect the inlet pipe.
4.Open the tap and make sure there is no water leakage.
5.Close the tap.

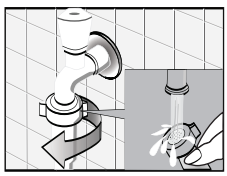

Fig 15

Care and maintenance

Looking after your appliance

Notes: Generally, the tap filter is washed first and then the filter in washing machine will be washed.
If only the filter in washing machine is washed, then the steps 1~3 in cleaning the tap filter shall be repeated (Fig16,17) .

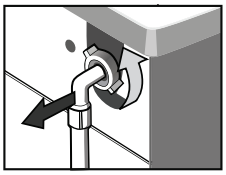

Fig 16

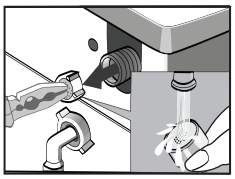

Fig 17

⚠

Pull out the power plug to avoid electrical shock before washing.
After using the washing machine, remove all the clothes and close the door tightly.

Remove foreign matters
Drain Pump Filter:
Drain pump filter can filter the yarns and small foreign matters from the washings.
Clean the filter periodically to ensure the normal operation of washing machine.

According to the soil level within the cycles and the frequency of the cycles, you have to inspect and clean the filter regularly.
The pump should be inspected if the machine does not empty and/or spin;The machine makes an unusual noise during draining due to objects such as safety pins, coins etc. blocking the pump.

Clean the pump filter :

1.After the power is disconnected, use hand to open the filter cover(Fig18).

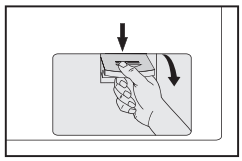

Fig 18

2.Turn the filter down as shown with the figure and take out sundries matters (Fig19) .

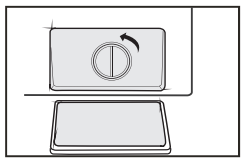

Fig 19

3.Reinstall each part back after sundries matters are removed (Fig20) .

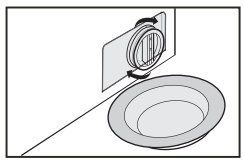

Fig 20

Warning!
When the appliance is in use and depending on the programme selected there can be hot water in the pump. Never remove the filter during a wash cycle, always wait until the appliance has finished the cycle, and is empty. When replacing the filter, ensure it Is securely retight end so.

Care and maintenance

Looking after your appliance

Technical specifcation

Brand	BELLING
Type/Description	Belling Fw612 Whi
Capacity	6kg
Spin Speed	1200 rpm
Energy efficiency class	A^{++}
Annual energy consumption	173 kWh/annum
Power consumption of off-mode	0.5W
Annual water consumption	9240 L/annum
Spin-drying efficiency class	B
Standard washing cycle	Cotton ECO
Energy consumption of the standard 60°C at full load	0.90 kwh/cycle
Energy consumption of the standard 60°C at partial load	0.65 kwh/cycle
Energy consumption of the standard 40°C at partial load	0.62 kwh/cycle
Programme duration of standard 60°C at full load	239 min
Programme duration of standard 60°C at partial load	210 min
Programme duration of standard 40°C at partial load	204 min
Water consumption of the standard 60°C at full load	48L/cycle
Water consumption of standard 60°C at partial load	37L/cycle
Water consumption of the standard 40°C at partial load	37L/cycle
Remaining moisture content of the standard 60°C at full load	50%
Remaining moisture content of the standard 60°C at partial load	55%
Remaining moisture content of the standard 40°C at partial load	55%
Noise level of washing	59dB (A)
Noise level of spinning	76dB (A)
Mounting	Free standing
Height	850 mm
Width	595 mm
Depth	470 mm
Power consumption	1950W
Rate voltage/frequency	220-240V~/50Hz
Water pressure	0.05-1 MPa

7 Product support

Help is always at hand

Troubleshooting

1.Washing Machine does not operate ?
You can check if the door is closed tightly, power plug is inserted well and then press start/pause button.

2.Washing Machine does not receive water ?
You can check if the water tap is opened and clean the filters of water inlet hose.

3.Washing Machine is not draining water ?
You can check the drain hose and clean pump filter.

4. Washing Machine is vibrating ?
You can check if the feet are adjusted well and make sure transportation screws are removed.

5. The washing result is poor ?
You can select suitable program and use more detergent.

6. No water is seen in the drum during washing ?
No failure. The water is in the lower part of the drum.

7. There are residues of detergent on the clothes ?
Some detergents contain ingredients which are not soluble in water and which may form white stains on your clothes. Please adjust your machine, carry out an additional rinse, or eliminate the stains after drying, with a brush.

8. There are grey stains on the clothes ?
These stains may be caused by oil, cream or ointment. In the next washing operation, use the maximum detergent amount declared by the detergent producer.

Product support

Help is always at hand

This appliance complies with the following EEC directives:
2014/35/EU low voltage directive
2014/30/EU EMC directive
2009/125/EC EU Directive

Notes on disposal:

This marking indicates that this product should not be disposed with other household wastes throughout the EU.To prevent possible harm to the environment or human health from uncontrolled waste disposal,recycle it responsibly to promote the sustainable reuse of material resources.To return your used device,please use the collection systems or contact the retailer where the product was purchased. They return and can take this product for environmental safe recycling.

Belling Customer Care

Please keep this handbook in a safe place.

Please fill in the model number
and serial number in the spaces provided below as they will assist us should you need to call.

0844 815 3746

When you dial this number you will hear a recorded message and be given a number of options. This indicates that your call has been accepted and is being held in a queue. Calls are answered in strict rotation as our Customer Care Representatives become available.

Enter appliance numbers here for future reference:

Model No

Serial No

These numbers can be found on your appliances.
Outside the UK and Northern Ireland, refer to your local supplier.

belling

Stoney Lane, Prescot, Merseyside, L35 2XW