Double oven HBM13B2.1B

BOSCH

[en] Instruction manual

en Table of contents

Important safety information 3
Causes of damage 5
Your new oven 5
Control panel 5
Buttons and display 5
Function and temperature selector 6
Function selector 6
Temperature selector 6
Cooking compartment 6
Your accessories 6
Inserting accessories 6
Optional accessories 7
After-sales service products 8
Before using the oven for the first time 9
Setting the clock 9
Heating up the oven 9
Cleaning the accessories 9
Setting the oven 9
Switching on the oven 9
Switching off the oven 9
Setting the time-setting options 10
Timer 10
Cooking time 10
End time 11
Clock 11
Childproof lock 11
Switching on the childproof lock 11
Switching off the childproof lock 11
Changing the basic settings 12
Care and cleaning 12
Cleaning agents 12
Detaching and refitting the rails 13
Detaching and attaching the oven door 13
Cleaning the door panels 14
Troubleshooting 14
Malfunction table 14
Replacing the oven light bulb 15
Glass cover 15
After-sales service 15
E number and FD number 15
Energy and environment tips 16
Saving energy 16
Environmentally-friendly disposal 16
Tested for you in our cooking studio 16
Cakes and pastries 16
Baking tips 18
Meat, poultry, fish 18
Tips for roasting and grilling 20
Preprepared products 20
Special dishes 21
Defrost 22
Drying 22
Acrylamide in foodstuffs 22
Test dishes 23
Baking 23
Grilling 23

Additional information on products, accessories, replacement parts and services can be found at **www.bosch-home.com** and in the online shop **www.bosch-eshop.com**

⚠ Important safety information

Read these instructions carefully. Only then will you be able to operate your appliance safely and correctly. Retain the instruction manual and installation instructions for future use or for subsequent owners.

This appliance is only intended to be fully fitted in a kitchen. Observe the special installation instructions.

Check the appliance for damage after unpacking it. Do not connect the appliance if it has been damaged in transport.

Only a licensed professional may connect appliances without plugs. Damage caused by incorrect connection is not covered under warranty.

This appliance is intended for domestic use only. The appliance must only be used for the preparation of food and drink. The appliance must be supervised during operation. Only use this appliance indoors.

This appliance may be used by children over the age of 8 years old and by persons with reduced physical, sensory or mental capacity or by persons with a lack of experience or knowledge if they are supervised or are instructed by a person responsible for their safety how to use the appliance safely and have understood the associated hazards.

Children must not play with the appliance. Children must not clean the appliance or carry out general maintenance unless they are at least 8 years old and are being supervised.

Keep children below the age of 8 years old at a safe distance from the appliance and power cable.

Always slide accessories into the cooking compartment correctly. *See "Description of accessories* in the instruction manual.

Risk of fire!

- Combustible items stored in the cooking compartment may catch fire. Never store combustible items in the cooking compartment. Never open the appliance door if there is smoke inside. Switch off the appliance and unplug it from the mains or switch off the circuit breaker in the fuse box.
- A draught is created when the appliance door is opened. Greaseproof paper may come into contact with the heating element and catch fire. Do not place greaseproof paper loosely over accessories during preheating. Always weight down the greaseproof paper with a dish or a baking tin. Only cover the surface required with greaseproof paper. Greaseproof paper must not protrude over the accessories.

Risk of burns!

- The appliance becomes very hot. Never touch the interior surfaces of the cooking compartment or the heating elements. Always allow the appliance to cool down. Keep children at a safe distance.
- Accessories and ovenware become very hot. Always use oven gloves to remove accessories or ovenware from the cooking compartment.
- Alcoholic vapours may catch fire in the hot cooking compartment. Never prepare food containing large quantities of drinks with a high alcohol content. Only use small quantities of drinks with a high alcohol content. Open the appliance door with care.

Risk of scalding!

- The accessible parts become hot during operation. Never touch the hot parts. Keep children at a safe distance.
- When you open the appliance door, hot steam may escape. Open the appliance door with care. Keep children at a safe distance.
- Water in a hot cooking compartment may create hot steam. Never pour water into the hot cooking compartment.

Risk of injury!

Scratched glass in the appliance door may develop into a crack. Do not use a glass scraper, or sharp or abrasive cleaning aids or detergents.

Risk of electric shock!

- Incorrect repairs are dangerous. Repairs may only be carried out by one of our trained after-sales engineers. If the appliance is faulty, unplug the mains plug or switch off the fuse in the fuse box. Contact the after-sales service.
- The cable insulation on electrical appliances may melt when touching hot parts of the appliance. Never bring electrical appliance cables into contact with hot parts of the appliance.
- Penetrating moisture may cause an electric shock. Do not use any high-pressure cleaners or steam cleaners.
- When replacing the cooking compartment bulb, the bulb socket contacts are live. Before replacing the bulb, unplug the appliance from the mains or switch off the circuit breaker in the fuse box.
- A defective appliance may cause electric shock. Never switch on a defective appliance. Unplug the appliance from the mains or switch off the circuit breaker in the fuse box. Contact the after-sales service.

Causes of damage

Caution!

- Accessories, foil, greaseproof paper or ovenware on the cooking compartment floor: do not place accessories on the cooking compartment floor. Do not cover the cooking compartment floor with any sort of foil or greaseproof paper. Do not place ovenware on the cooking compartment floor if a temperature of over 50 ºC has been set. This will cause heat to accumulate. The baking and roasting times will no longer be correct and the enamel will be damaged.
- Water in a hot cooking compartment: do not pour water into the cooking compartment when it is hot. This will cause steam. The temperature change can cause damage to the enamel.
- Moist food: do not store moist food in the cooking compartment when it is closed for prolonged periods This will damage the enamel.
- Fruit juice: when baking particularly juicy fruit pies, do not pack the baking tray too generously. Fruit juice dripping from the baking tray leaves stains that cannot be removed. If possible, use the deeper universal pan.
- Cooling with the appliance door open: only allow the cooking compartment to cool when it is closed. Even if the appliance door is only open a little, front panels of adjacent units could be damaged over time.
- Very dirty door seal: If the door seal is very dirty, the appliance door will no longer close properly when the appliance is in use. The fronts of adjacent units could be damaged.Always keep the door seal clean.
- Appliance door as a seat, shelf or worktop: Do not sit on the appliance door, or place or hang anything on it. Do not place any cookware or accessories on the appliance door.
- Inserting accessories: depending on the appliance model, accessories can scratch the door panel when closing the appliance door. Always insert the accessories into the cooking compartment as far as they will go.
- Carrying the appliance: do not carry or hold the appliance by the door handle. The door handle cannot support the weight of the appliance and could break.

Your new oven

Here you will learn about your new oven. The control panel and the individual operating controls are explained. You will find information on the cooking compartment and the accessories.

Control panel

Here is an overview of the control panel. The display never shows all of the symbols at the same time. Details may vary, depending on the appliance model.

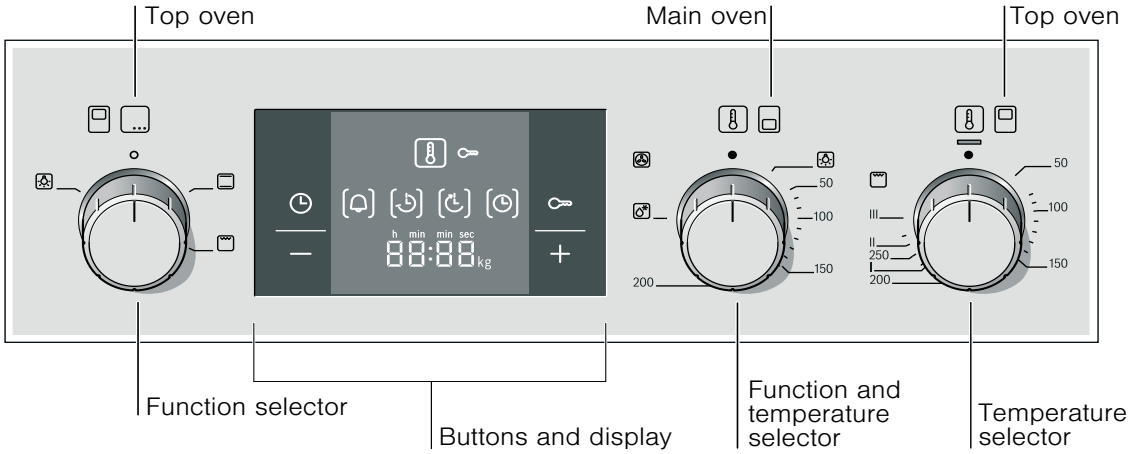

Control knobs

The control knobs can be popped out. Simply press the control knob when it is in the off position to pop it in or out.

Buttons

The sensors are located under the individual buttons. They must not be pressed too firmly. Only touch the corresponding symbol.

Buttons and display

You can use the buttons to set various additional functions. You can read the values that you have set in the display.

Button		Use
◷	Time-setting options	Selects the timer 🔔, cooking time ◷, end time ◷ and clock ◷.
⊶	Childproof lock	Locks and unlocks the control panel.
–	Minus	Decreases the set values.
+	Plus	Increases the set values.

The time-setting option that is currently selected in the display is indicated by the brackets [ ] around the corresponding symbol. Exception: for the clock, the ◷ symbol only lights up when you are making changes.

Function and temperature selector

Using the function and temperature selector, set the type of heating and temperature in the main oven.

Setting		Use
●	Off position	The main oven is switched off.
	3D hot air* 50 - 250 °C	For cakes and pastries on one or more levels. The fan distributes the heat from the heating ring in the back panel evenly around the cooking compartment.
	Defrosting	For defrosting, e.g. meat, poultry, bread and cakes. The fan causes the warm air to swirl around the dish.
	Oven light	Switches on the oven light.

* Type of heating used to determine the energy efficiency class according to EN50304.

When you make settings, the oven light in the cooking compartment switches on.

When the main oven is heating, the symbol lights up in the display. It goes out during pauses in the heating. For the Defrost type of heating, the symbol does not light up.

Function selector

Use the function selector to select the type of heating for the main oven.

Setting		Use
○	Off position	The top oven is switched off.
	Top/bottom heating*	For cakes, bakes and lean joints of meat, e.g. beef or game, on one level. The heat is emitted evenly from above and below.
	Grill, large area	For grilling steaks, sausages, toast and pieces of fish. The whole area below the grill heating element becomes hot.
	Oven light	Switches on the oven light.

* Type of heating used to determine the energy efficiency class according to EN50304.

When you make settings, the oven light in the cooking compartment switches on.

Temperature selector

Use the temperature selector to set the temperature or grill setting in the top oven.

Setting		Use
●	Off position	The top oven is not heating.
50 - 270	Temperature range	The temperature in the cooking compartment in °C.
I, II, III	Grill settings	The grill settings for the Grill, large area. I = level 1, low II = level 2, medium III = level 3, high

When the top oven is heating, the indicator lamp for the temperature lights up. It goes out during heating pauses.

Cooking compartment

The oven light is located in the cooking compartment. A cooling fan protects the oven from overheating.

Oven light

During operation, the oven light in the cooking compartment is on. The setting on the function selector can be used to switch on the light without heating the oven.

Cooling fan

The cooling fan switches on and off as required. The hot air escapes above the door. Caution: do not cover the ventilation slots. Otherwise the oven will overheat.

So that the cooking compartment cools down more quickly after operation, the cooling fan continues to run for a certain period afterwards.

Your accessories

The accessories supplied with your appliance are suitable for making many meals. Ensure that you always insert the accessories into the cooking compartment the right way round.

There is also a selection of optional accessories, with which you can improve on some of your favourite dishes, or simply to make working with your oven more convenient.

Inserting accessories

When sliding the accessories into the cooking compartment, ensure that the kink in the side rail is at the back. Only then will they lock in place.

The accessories can be pulled out approximately halfway until they lock in place. This allows meals to be removed easily.

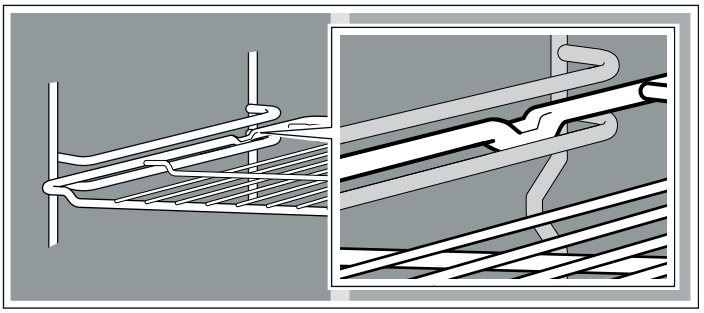

Note: The accessories may become deformed when they become hot. Once they cool down again, they regain their original shape. This does not affect their function.

Main oven
You can insert the accessories into the cooking compartment at 5 different levels. Always insert them as far as they will go so that the accessories do not touch the door panel.

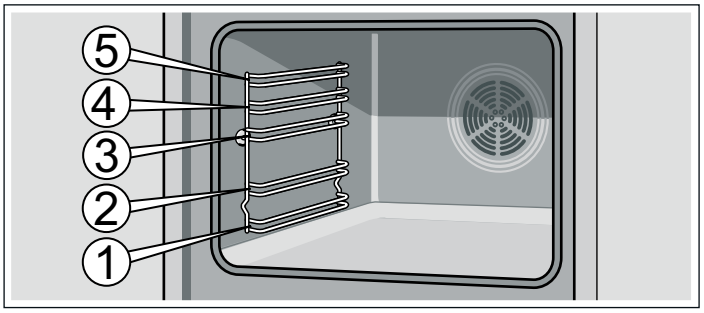

Top oven
You can insert the accessories into the cooking compartment at 2 different levels. Always insert them as far as they will go so that the accessories do not touch the door panel.

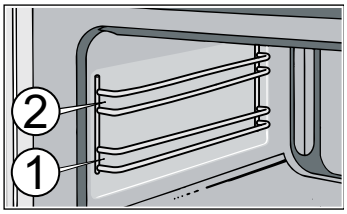

You can buy accessories from the after-sales service, from specialist retailers or online. Please specify the HEZ number.

Wire rack
For ovenware, cake tins, joints, grilled items and frozen meals.

Insert the wire rack with the open side facing the oven door and the curvature pointing downwards ⌣.

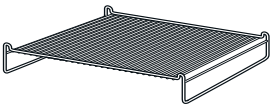

Insert grid
For roasting.

Place the wire insert in the universal pan with the legs facing downwards. This ensures that dripping fat and meat juices are collected.

Universal pan
For moist cakes, pastries, frozen meals and large roasts. It can also be used to catch dripping fat when you are grilling directly on the wire rack.

Slide in the universal pan with the sloping edge facing the oven door.

Optional accessories

You can purchase optional accessories from the after-sales service or specialist retailers. You will find a comprehensive range of products for your oven in our brochures and on the Internet. The availability of optional accessories and the option for ordering these online varies from country to country. Please see the sales brochures for more details.

Not all optional accessories are suitable for every appliance. When purchasing, please always quote the exact designation (E-no.) of your appliance.

Optional accessories	HEZ number	Use
Wire rack	HEZ334000	For ovenware, cake dishes, joints, grilled items and frozen meals.
Enamel baking tray	HEZ331003	For cakes and biscuits. Push the baking tray into the oven with the sloping edge facing towards the oven door.
universal pan	HEZ332003	For moist cakes, baked items, frozen meals and large joints. It can also be used to catch dripping fat when grilling directly on the wire rack. Slide the universal pan into the oven with the sloping edge facing the oven door.
Wire insert	HEZ324000	For roasting. Always place the wire rack in the universal pan. This ensures that dripping fat and meat juices are collected.
Grill tray	HEZ325000	Use for grilling in place of the wire rack or as a splatter guard, so that the oven does not become as dirty as it otherwise might. Only use the grill tray in the universal pan. Grilling on the grill tray: only use at shelf position 1, 2 and 3. Using the grill tray as a splatter guard: insert the universal pan with the grill tray under the wire rack.
Pizza tray	HEZ317000	Ideal for pizza, frozen products or large round cakes. You can use the pizza tray instead of the universal pan. Place the baking tray on the wire rack and proceed according to the details in the tables.
Bakestone	HEZ327000	The bakestone is perfect for preparing home-made bread, bread rolls and pizzas which require a crispy base. The bakestone must always be preheated to the recommended temperature.
Enamel baking tray with non-stick coating	HEZ331011	Cakes and biscuits can be removed more easily from the baking tray. Push the baking tray into the oven with the sloping edge facing towards the oven door.
Universal pan with non-stick coating	HEZ332011	Moist cakes, baked items, frozen meals and large joints can be removed more easily from the universal pan. Slide the universal pan into the oven with the sloping edge facing the oven door.
Profi extra-deep pan with wire insert	HEZ333003	Ideally suited for preparing large amounts.

Optional accessories	HEZ number	Use
Lid for the Profi extra-deep pan	HEZ333001	The lid converts the Profi extra-deep pan into the Profi roasting dish.
Glass roasting dish	HEZ915001	The glass roasting dish is suitable for stews and bakes that are cooked in the oven. It is ideally suited to automatic programmes or automatic roasting.
Telescopic shelves		
2-level	HEZ338250	The pull-out rails fitted at positions 2 and 3 allow you to pull accessories out further without them tipping.
3-level	HEZ338352	The pull-out rails fitted at positions 1, 2 and 3 allow you to pull accessories out further without them tipping. The 3-level pull-out is not suitable for appliances that have a rotary spit.
3-level complete pull-out	HEZ338356	The pull-out rails fitted at positions 1, 2 and 3 allow you to pull accessories out fully without them tipping. The 3-level complete pull-out is not suitable for appliances that have a rotary spit.
3-level complete pull-out with stop function	HEZ338357	The pull-out rails fitted at positions 1, 2 and 3 allow you to pull accessories out fully without them tipping. The pull-out rails lock in position allowing accessories to be easily placed on top. The 3-level complete pull-out with stop function is not suitable for appliances that have a rotary spit.
Self-cleaning side walls		
Appliance with an oven light	HEZ339020	You can retrofit side walls so that the cooking compartment automatically cleans itself during operation.
Appliances with an oven light and automatic roasting	HEZ339020	You can retrofit side walls so that the cooking compartment automatically cleans itself during operation.
Self-cleaning oven ceiling and side walls		
Appliances with one oven light and a folding grill element	HEZ329020	You can retrofit the ceiling and side walls so that the cooking compartment automatically cleans itself during operation.
Appliances with two oven lights and a folding grill element	HEZ329023	You can retrofit the ceiling and side walls so that the cooking compartment automatically cleans itself during operation.
Appliances with one oven light, a folding grill element and a meat thermometer	HEZ329027	You can retrofit the ceiling and side walls so that the cooking compartment automatically cleans itself during operation.
Steam filter	HEZ329000	You can retrofit this to your oven. The steam filter filters out grease particles from the exhaust air, thereby reducing odours. Only for appliances with a 6, 7 or 8 as the second digit in the E-no.(e.g. HBA38B750)
System steamer	HEZ24D300	For a gentler preparation of vegetables and fish.

After-sales service products

You can obtain suitable care and cleaning agents and other accessories for your domestic appliances from the after-sales service, specialist retailers or (in some countries) online via the e-Shop. Please specify the relevant product number.

Cleaning cloths for stainless-steel surfaces	Product no. 311134	Reduces the build-up of dirt. Impregnated with a special oil for perfect maintenance of your appliance's stainless-steel surfaces.
Oven and grill cleaning gel	Product no. 463582	For cleaning the cooking compartment. The gel is odourless.
Microfibre cloth with honeycomb structure	Product no. 460770	Especially suitable for cleaning delicate surfaces, such as glass, glass ceramic, stainless steel or aluminium. The microfibre cloth removes liquid and grease deposits in one go.
Door lock	Product no. 612594	To prevent children from opening the oven door. The locks on different types of appliance door are screwed in differently. See the information sheet supplied with the door lock.

Before using the oven for the first time

In this section, you can find out what you must do before using your oven to prepare food for the first time. First read the section on *Safety information*.

Setting the clock

After the appliance has been connected, the ◷ symbol and four zeros flash in the display. Set the clock.

1. Press the ◷ button.
   The clock in the display shows 12:00. The time symbols light up and the brackets are around ◷.
2. Use the **+** or **–** button to set the clock.

After a few seconds, the time that has been set is adopted.

Heating up the oven

To get rid of the new cooker smell, heat up the oven when it is empty and closed. One hour with 3D hot air or Top/bottom heating at 240 °C is ideal. Make sure that there are no packaging remains in the cooking compartments.

1. Use the function selector to set Top/bottom heating.
2. Use the temperature selector to set the temperature to 240 °C.
3. Use the function and temperature selector to set 240 °C and 3D hot air.
   Turn the oven off after one hour. To do so, turn all function and temperature selectors to the off position.

Cleaning the accessories

Before you use the accessories for the first time, clean them thoroughly with hot soapy water and a soft dish cloth.

Setting the oven

There are various ways in which you can set your oven. Here we will explain how you can select the desired type of heating and temperature or grill setting. You can select the oven cooking time and end time for your dish. Please refer to the section on *Setting the time-setting options*.

Switching on the oven

Main oven

Using the function and temperature selector, set a temperature for 3D hot air mode.

Turn the function and temperature selector to the position to set the Defrost setting.

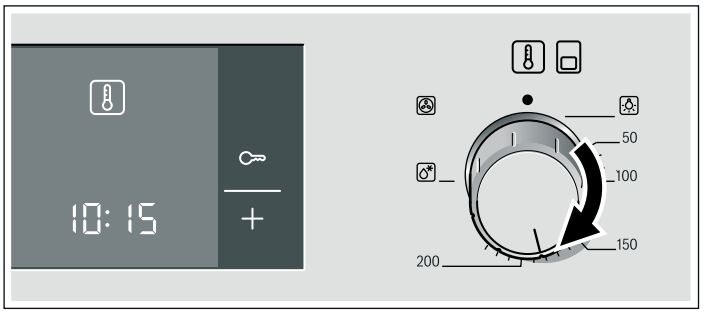

The main oven begins to heat up.

Top oven

Example shown below: Top/bottom heating at 200°C

1. Use the function selector to set the type of heating.

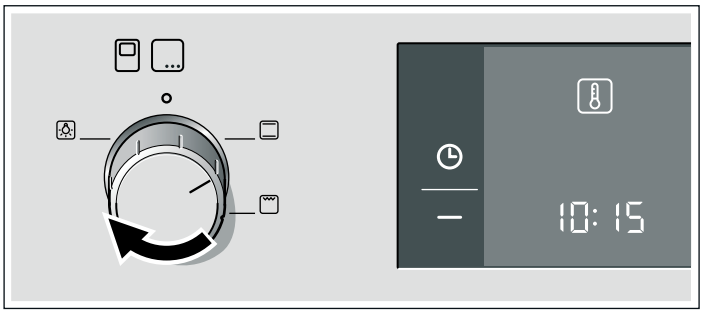

2. Set the temperature or grill setting using the temperature selector.

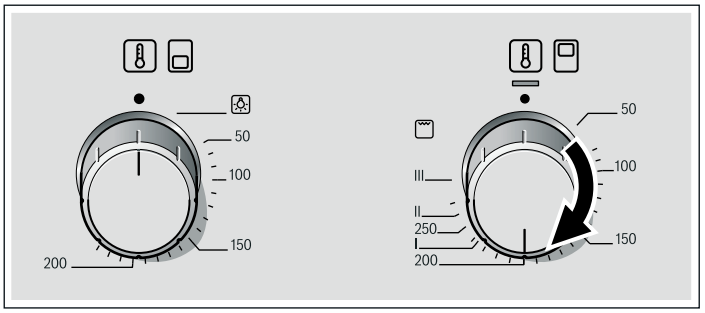

The top oven begins to heat up.

Changing the settings

The type of heating and temperature or grill setting can be changed at any time with their respective selector.

Switching off the oven

Turn the function and temperature selector to the off position.

Setting the time-setting options

The main oven has various time-setting options. You can use the button to access the menu and switch between the individual options. All the time symbols are lit during the time when you can make settings. The [ ] brackets show you which time-setting function you have currently selected. A time-setting option which has already been set can be changed directly using the + or − button, when its time symbol is in brackets.

Timer

You can use the timer as a kitchen timer. It runs independently of the oven. The timer has its own signal. In this way, you can tell whether it is the timer or a cooking time which has elapsed.

1. Press the button once.
   The time symbols light up in the display and the brackets are around .
2. Use the + or − button to set the timer duration.
   Default value for +button = 10 minutes
   Default value for −button = 5 minutes

After a few seconds, the time setting is adopted. The timer starts. The [] symbol lights up in the display and the timer duration counts down. The other time symbols go out.

The timer duration has elapsed

A signal sounds. 00:00 is shown in the display. Use the button to switch off the timer.

Changing the timer duration

Use the + or − button to change the timer duration. After a few seconds, the change is adopted.

Cancelling the timer duration

Use the − button to reset the timer duration to 00:00. The change will be adopted after a few seconds. The timer is switched off.

Checking the time settings

If several time-setting options are set, the relevant symbols are illuminated on the display. The symbol for the time-setting option that is visible in the display is shown in brackets.

To call up the timer, cooking time, end time or clock, press the button repeatedly until the brackets are around the relevant symbol. The display shows the value for a few seconds.

Cooking time

You can set a cooking time for your dish in the main oven. When the cooking time has elapsed, the main oven switches itself off automatically. This means that you do not have to interrupt other work to switch off the main oven. The cooking time cannot be accidentally exceeded.

Example shown below: Cooking time of 45 minutes.

1. Turn the function and temperature selector to set the heating type and temperature for the main oven.
2. Press the button twice. The display shows 00:00. The time symbols light up, the brackets are around .

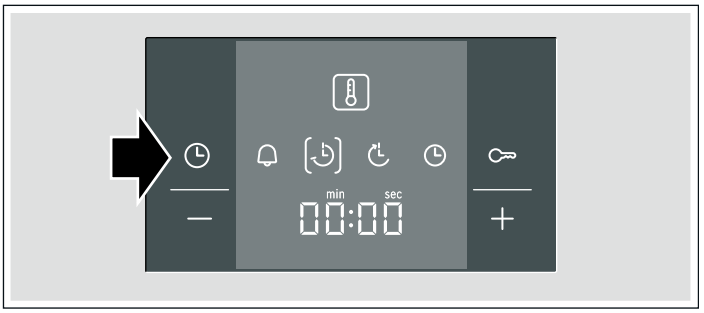

3. Use the + or − button to set the cooking time.
   - Default value for the + button = 30 minutes
   - Default value for the− button = 10 minutes

The main oven will start up after a few seconds. The cooking time counts down in the display and the [] symbol lights up. The other time symbols go out.

The cooking time has elapsed

A signal sounds. The main oven stops heating. 00:00 is shown in the display. Press the button. The + or − buttons can be used to set a new cooking time. Or press the button twice and turn the function and temperature selector to the off position. The main oven is switched off.

Changing the cooking time

Use the + or − button to change the cooking time. After a few seconds, the change is adopted. If the timer has been set, press the button beforehand.

Cancelling the cooking time

Use the − button to reset the cooking time to 00:00. After a few seconds, the change is adopted. The cooking time is cancelled. If the timer has been set, press the button beforehand.

Checking the time settings

If several time-setting options are set, the relevant symbols are illuminated on the display. The symbol for the time-setting option that is visible in the display is shown in brackets.

To call up the timer, cooking time, end time or clock, press the button repeatedly until the brackets are around the relevant symbol. The display shows the value for a few seconds.

End time

You can delay the time at which you wish your dish to be ready. The main oven starts automatically and finishes at the desired time. You can, for example, put your dish in the compartment in the morning and set the cooking time so that it is ready at lunch time.

Ensure that food is not left in the cooking compartment for too long as it may spoil.

Example shown below: It is 10:30 , the cooking time is 45 minutes and the main oven is required to finish cooking at 12:30.

1. Turn the function and temperature selector to set the heating type and temperature for the main oven.
2. Press the button twice.
3. Use the + or − button to set the cooking time.
4. Press the button. The brackets are around . The time when the dish will be ready is displayed.

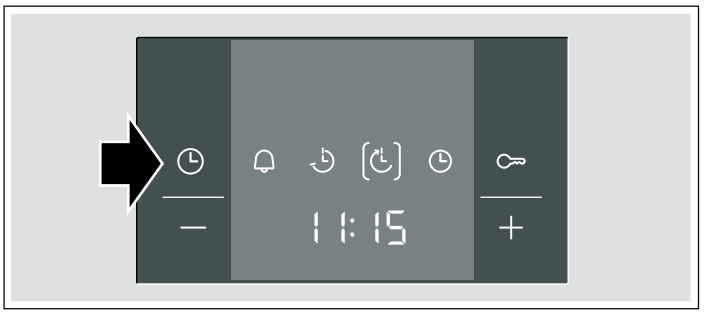

5. Use the button + or − to delay the end time.

After a few seconds, the oven adopts the settings and switches to standby. The display shows the time at which the dish will be ready and the symbol is in brackets. The symbols and go out. When the main oven starts, the cooking time counts down in the display and the symbol is shown in brackets. The symbol goes out.

The cooking time has elapsed

A signal sounds. The main oven stops heating. 00:00 is shown in the display. Press the button. The + or − buttons can be used to set a new cooking time. Or press the button twice and turn the function and temperature selector to the off position. The main oven is switched off.

Changing the end time

Use the + or − button to change the end time. After a few seconds, the change is adopted. If the timer has been set, first press the button twice. Do not change the end time if the cooking time has already started to elapse. The cooking result would no longer be correct.

Cancelling the end time

Use the − button to set the end time back to the current time. After a few seconds, the change is adopted. The main oven starts. If the timer has been set, first press the button twice.

Checking the time settings

If several time-setting options are set, the relevant symbols are illuminated on the display. The symbol for the time-setting option that is visible in the display is shown in brackets.

To call up the timer, cooking time, end time or clock, press the button repeatedly until the brackets are around the relevant symbol. The display shows the value for a few seconds.

Clock

After the appliance is connected or following a power cut, the symbol and four zeros flash in the display. Set the clock.

1. Press the button.
   The clock in the display shows 12:00. The time symbols light up and the brackets are around .
2. Use the + or − button to set the clock.

After a few seconds, the time that has been set is adopted.

Changing the clock

No other time-setting option should have been set.

1. Press the button four times.
   The time symbols light up in the display and the brackets are around .
2. Use the + or − button to change the clock.

After a few seconds, the time that has been set is adopted.

Hiding the clock

You can hide the clock. For more information, please refer to the section *Changing the basic settings*.

Childproof lock

The main oven has a childproof lock to prevent children from switching it on by accident or changing a setting.

The main oven does not respond to any settings. You can still set the clock and the timer when the childproof lock is activated.

If the heating type and temperature or grill setting are set for the main oven, the childproof lock interrupts the heater element.

Switching on the childproof lock

No cooking time or end time may be set.

Press and hold the button for approximately 4 seconds.

The symbol appears in the display. The childproof lock is activated.

Switching off the childproof lock

Press and hold the button for approximately 4 seconds.

The symbol in the display goes out. The childproof lock is deactivated.

Changing the basic settings

Your oven has various basic settings. These settings can be customised to suit your requirements.

Basic setting	Selection 1	Selection 2	Selection 3
c1 Clock display	always*	only with the ◷ button	-
c2 Signal duration upon completion of a cooking time or timer period	approx. 10 seconds	approx. 2 minutes*	approx. 5 minutes
c3 Waiting time until a setting is applied	approx. 2 seconds	approx. 5 seconds*	approx. 10 seconds

* Factory setting

No other time-setting option should have been set.

1. Press and hold the ◷ button for approx. 4 seconds.
   The current basic setting for the clock display is shown in the display, e.g. c1 1 for selection 1.
2. Use the **+** or **–** button to change the basic setting.
3. Confirm by pressing the ◷ button.
   The next basic setting appears in the display. You can scroll through all levels with the ◷ button and change the setting with the **+** or **–** button.
4. To finish, press and hold the ◷ button for approx. 4 seconds.

All basic settings are applied.

You may change the basic settings at any time.

Care and cleaning

With good care and cleaning, your oven will remain clean and fully-functioning for a long time to come. Here we will explain how to maintain and clean your oven correctly.

Notes

- Slight differences in the colours on the front of the oven are caused by the use of different materials, such as glass, plastic and metal.
- Shadows on the door panel which look like streaks, are caused by reflections made by the oven light.
- Enamel is baked on at very high temperatures. This can cause some slight colour variations. This is normal and does not affect their function. The edges of thin trays cannot be completely enamelled. As a result, these edges can be rough. This will not impair the anti-corrosion protection.

Cleaning agents

To ensure that the different surfaces are not damaged by using the wrong cleaning agent, observe the information in the table. Do not use

- sharp or abrasive cleaning agents,
- cleaning agents with a high concentration of alcohol,
- hard scouring pads or sponges,
- high-pressure cleaners or steam cleaners.

Wash new sponge cloths thoroughly before use.

Area	Cleaning agents
Oven front	Hot soapy water: Clean with a dish cloth and dry with a soft cloth. Do not use glass cleaners or glass scrapers.
Stainless steel	Hot soapy water: Clean with a dish cloth and dry with a soft cloth. Remove flecks of limescale, grease, starch and albumin (e.g. egg white) immediately. Corrosion can form under such residues. Special stainless steel cleaning products suitable for warm surfaces are available from our after-sales service or from specialist retailers. Apply a thin layer of the cleaning product with a soft cloth.
Door panels	Glass cleaner: Clean with a soft cloth. Do not use a glass scraper.
Glass cover for the oven light	Hot soapy water: Clean with a dish cloth.
Seal Do not remove.	Hot soapy water: Clean with a dish cloth. Do not scour.
Shelves	Hot soapy water: Soak and clean with a dish cloth or brush.
Telescopic shelves	Hot soapy water: Clean with a dish cloth or a brush. Do not soak or clean in the dishwasher.
Accessories	Hot soapy water: Soak and clean with a dish cloth or brush.

Cleaning self-cleaning surfaces in the cooking compartment

The back panel and ceiling in the top oven, and the back panel in the main oven, are coated with self-cleaning enamel. This coating absorbs and dispels splashes from baking and roasting while the oven is in operation. The higher the temperature and the longer the oven is in operation the better the result will be.

If dirt is still visible after operating the oven several times, clean the self-cleaning surfaces with hot soapy water and a soft cloth.

Over time, discolourations may occur, which can no longer be removed. These will not damage the enamel.

Caution!

Damage to surfaces on self-cleaning areas due to applying oven cleaner.Never clean the self-cleaning surfaces with oven cleaner.

If oven cleaner accidentally gets onto self-cleaning surfaces, remove it immediately with a sponge and plenty of water.

Caution!

Damage to surfaces on self-cleaning areas due to the use of abrasive and acidic cleaning agents and aids.

Do not use cleaning agents containing abrasive substances or acids.

Do not use abrasive cleaning aids such as steel wool or scourers.

Clean the cooking compartment floor and side panels

Use a dish cloth and hot soapy water or a vinegar solution.

If there are heavy deposits of dirt, use a stainless steel scouring pad or oven cleaner. Only use when the cooking compartment is cold. Never treat the self-cleaning surfaces with a scouring pad or oven cleaner.

Detaching and refitting the rails

The rails can be removed for cleaning. The oven must have cooled down.

Detaching the rails

1. Lift up the front of the rail
2. and unhook it (figure A).
3. Then pull the whole rail forward
4. and remove it (Fig. B).

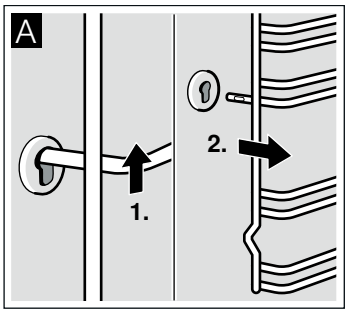

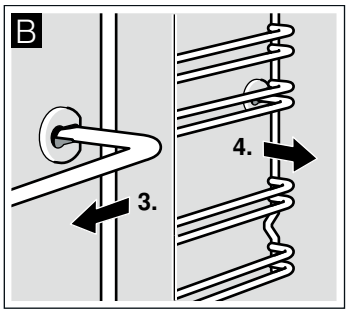

Clean the rails with cleaning agent and a sponge. For stubborn deposits of dirt, use a brush.

Refitting the rails

1. First insert the rail into the rear socket, press it to the back slightly (figure A),
2. and then hook it into the front socket (figure B).

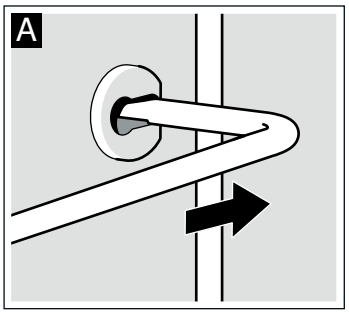

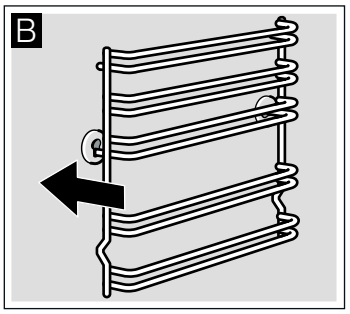

The rails fit both the left and right sides. Ensure that, as shown in figure B, levels 1 and 2 are below and levels 3, 4 and 5 are above.

Detaching and attaching the oven door

For cleaning purposes and to remove the door panels, you can detach the oven door.

The oven door hinges each have a locking lever. When the locking levers are closed (figure A), the oven door is secured in place. It cannot be detached. When the locking levers are open in order to detach the oven door (Fig. B), the hinges are locked. They cannot snap shut.

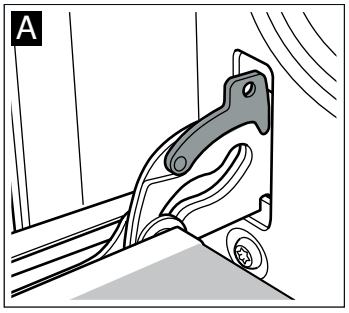

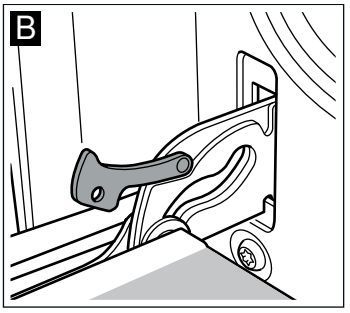

⚠ Risk of injury!

Whenever the hinges are not locked, they snap shut with great force. Ensure that the locking levers are always fully closed or, when detaching the oven door, fully open.

Detaching the door

1. Open the oven door fully.
2. Fold up the two locking levers on the left and right (figure A).
3. Close the oven door as far as the limit stop. With both hands, grip the door on the left and right-hand sides. Close the door a little further and pull it out (figure B).

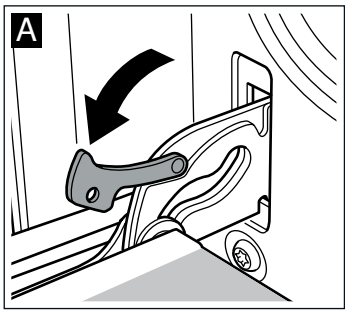

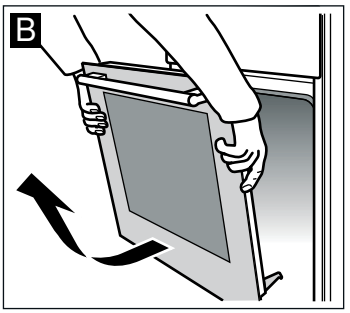

Attaching the door

Reattach the oven door in the reverse sequence to removal.

1. When attaching the oven door, ensure that both hinges are inserted straight into the opening (figure A).
2. The notch on the hinge must engage on both sides (figure B).

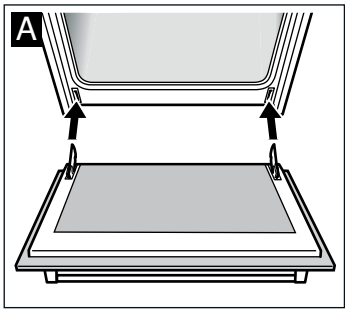

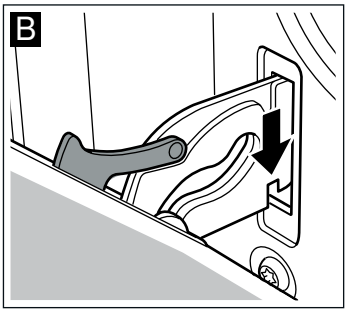

3. Fold back both locking levers (figure C). Close the oven door.

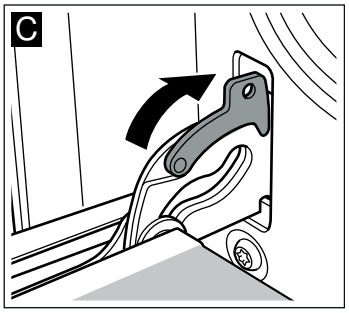

⚠ Risk of injury!

If the oven door falls out accidentally or a hinge snaps shut, do not reach into the hinge. Call the after-sales service.

Cleaning the door panels

To facilitate cleaning, you can remove the inner door panels from the appliance door.

⚠ **Risk of injury!**

The components inside the appliance door may have sharp edges. Take care not to cut yourself. Wear protective gloves.

⚠ **Risk of injury!**

The appliance must not be used again until the door panels and appliance door have been correctly fitted.

Removing the door panel

Note: Before removing, make a note of which way round the door panel is fitted, so that it is not refitted the wrong way round.

1. Unhook the appliance door and lay it on a soft, clean surface with the front side facing downwards (see section: Removing and installing the appliance door).
2. Pull off the cover at the top of the appliance door. Press in the tabs on the left and right using your fingers (fig.A).
3. Lift the door panel slightly and pull it out (Fig. B).

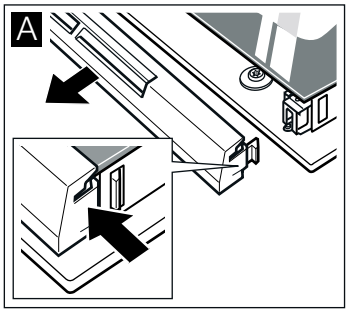

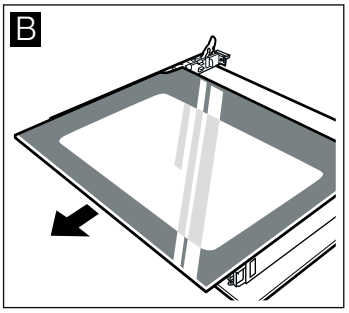

Removing the intermediate panel

Lift the intermediate panel slightly and pull it out towards you.

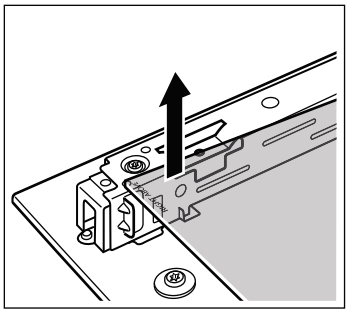

Cleaning

Clean the door panel with glass cleaner and a soft cloth.

⚠ **Risk of injury!**

Scratched glass in the appliance door may develop into a crack. Do not use a glass scraper, or sharp or abrasive cleaning aids or detergents.

Fitting the intermediate panel

Note: During installation, make sure that the lettering "top right" is upside down at the bottom left.

Insert the intermediate panel towards the back as far as it will go.

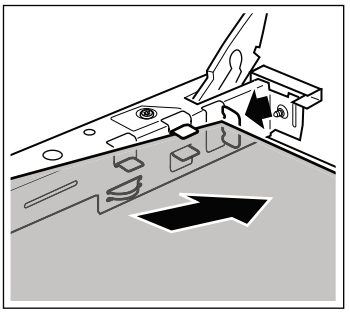

Fitting the door panel

1. Insert the door panel at an angle towards the back into both brackets as far as it will go. The smooth surface must face outwards.

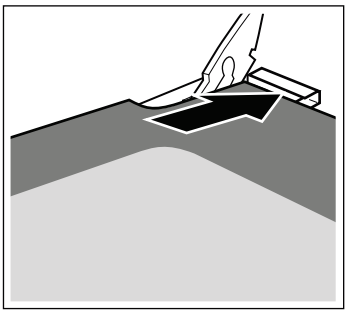

2. Put the cover back in place and press on it until it clicks in place.
3. Refit the appliance door.

Troubleshooting

Malfunctions often have simple explanations. Refer to the table before calling the after-sales service as you may be able to remedy the fault yourself.

Malfunction table

If a dish does not turn out as well as you had hoped, refer to the section *Tested for you in our cooking studio*, where you will find plenty of cooking tips and notes.

Problem	Possible cause	Remedy/information
The oven does not work.	The circuit breaker is defective.	Look in the fuse box and check that the circuit breaker is in working order.
	Power cut	Check whether the kitchen light or other kitchen appliances are working.
◷ and zeros flash in the display.	Power cut	Reset the clock.
The oven does not heat up.	There is dust on the contacts.	Turn the control knobs back and forth several times.

Error messages

If an error message with E appears, press the ◷ button. The message disappears. A time function that has been set is cleared. If the error message does not disappear, please contact the after-sales service.

You can take remedial action yourself if the following error message is displayed.

Error message	Possible cause	Remedy/information
E011	A button was depressed for too long or is covered up.	Press all buttons individually. Check whether any buttons are jammed, covered up or soiled.

⚠ **Risk of electric shock!**

Incorrect repairs are dangerous. Repairs may only be carried out by one of our trained after-sales engineers.

Replacing the oven light bulb

Replace faulty oven light bulbs.

Spare bulbs can be obtained from the after-sales service or specialist retailers. Only use these oven light bulbs.

- For the main oven: E14, 220 - 240 V, 40 W, heat-resistant to 300 °C.
- For the top oven: E14, 220 - 240 V, 25 W, heat-resistant to 300 °C.

⚠ **Risk of electric shock !**

Disconnect the appliance from the power supply. Switch off the circuit breaker or remove the fuse from the household fuse box.

1. Place a tea towel in the cold cooking compartment to prevent damage.
2. Turn the glass cover anticlockwise and remove it.

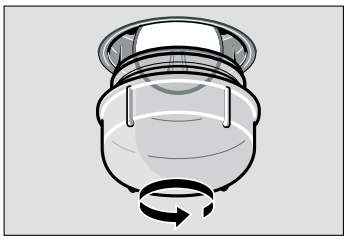

3. Replace the oven light bulb with a bulb of the same type.
4. Screw on the glass cover again.
5. Remove the tea towel and switch on the circuit breaker.

Note: Use rubber gloves if the glass cover cannot be unscrewed: Or order a special removal tool from the after-sales service:

- For the main oven: Order no. 613634
- For the top oven: Order no. 621743

Glass cover

You must replace a damaged glass cover. Suitable glass covers may be obtained from the after-sales service. Please specify the E number and FD number of your appliance.

After-sales service

Our after-sales service is there for you if your appliance needs to be repaired. We will always find the right solution in order to avoid unnecessary visits from a service technician.

E number and FD number

When calling us, please give the product number (E no.) and the production number (FD no.) so that we can provide you with the correct advice. The rating plate containing these numbers can be found on the right-hand side of the oven door. You can make a note of the numbers of your appliance and the telephone number of the after-sales service in the space below to save time should it be required.

E no.	**FD no.**

After-sales service ☏

Please note that there will be a fee for a visit by a service technician in the event of a malfunction, even during the warranty period.

Please find the contact data of all countries in the enclosed customer service list.

To book an engineer visit and product advice

GB 0844 8928979
Calls from a BT landline will be charged at up to 3 pence per minute. A call set-up fee of up to 6 pence may apply.

IE 01450 2655

Trust the expertise of the manufacturer, and rest assured that the repair will be carried out by trained service technicians using original spare parts for your domestic appliance.

Energy and environment tips

Here you can find tips on how to save energy when baking and roasting and how to dispose of your appliance properly.

Saving energy

- Only preheat the oven if this is specified in the recipe or in the operating instruction tables.
- Use dark, black lacquered or enamelled baking tins. They absorb the heat particularly well.
- Open the oven door as infrequently as possible while you are cooking, baking or roasting.
- It is best to bake several cakes one after the other. The oven is still warm. This reduces the baking time for the second cake. You can also place two loaf tins next to each other.
- For longer cooking times, you can switch the oven off 10 minutes before the end of the cooking time and use the residual heat to finish cooking.

Environmentally-friendly disposal

Dispose of packaging in an environmentally-friendly manner.

This appliance complies with European Directive 2002/96/EC on Waste Electrical and Electronic Equipment (WEEE). The directive gives a framework for the collection and recycling of old appliances, which is valid across the EU.

Tested for you in our cooking studio

Here you will find a selection of dishes and the ideal settings for them. We will show you which type of heating and which temperature are best suited for your dish. You can find information about suitable accessories and the height at which they should be inserted. There are also tips about cookware and preparation methods.

Notes

- The values in the table always apply to dishes placed into the cooking compartment when it is cold and empty.

  Only preheat the appliance if the table specifies that you should do so. Do not line the accessories with greaseproof paper until after they have been preheated.
- The times specified in the tables are guidelines only. They will depend on the quality and composition of the food.
- Use the accessories supplied. Additional accessories may be obtained as special accessories from specialist retailers or from the after-sales service.

  Before using the oven, remove any unnecessary accessories and ovenware from the cooking compartment.
- Always use oven gloves when taking hot accessories or ovenware out of the cooking compartment.

Cakes and pastries

Baking on one level

When baking with 3D hot air, use the following shelf heights for the accessory:

- Cakes in tins: level 2
- Cakes on trays: level 3

Baking on two or more levels

Use 3D hot air.

Baking on 2 levels

- Wire rack or universal pan at shelf position 3
- Wire rack at shelf position 1.

Baking on 3 levels:

- Wire rack at shelf position 5
- Universal pan at shelf position 3
- Wire rack at shelf position 1.

Baking trays that are placed in the oven at the same time will not necessarily be ready at the same time.

The tables show numerous suggestions for your dishes.

If you have 2 small, round cake tins, place them on one level next to each other on the wire rack.

If you have 4 small, round cake tins, place 2 next to each other on each wire rack. Slide in the wire racks one above the other.

If you are baking with 3 loaf tins at the same time, place these on the wire racks as indicated in the picture.

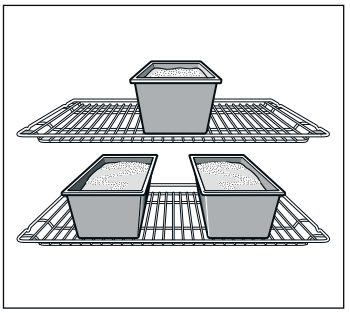

Baking tins

It is best to use dark-coloured metal baking tins.

Baking times are increased when light-coloured baking tins made of thin metal or glass dishes are used, and cakes do not brown so evenly.

If you wish to use silicone baking tins, use the information and recipes provided by the manufacturer as a guide. Silicone baking tins are often smaller than normal tins. The amount of mixture and recipe instructions may differ.

Tables

The tables show the ideal type of heating for the various cakes and pastries. The temperature and baking time depend on the amount and consistency of the mixture. This is why temperature ranges are given in the tables. You should try the lower temperature first, since a lower temperature allows more even browning. You can increase the temperature next time if necessary.

More information can be found in the “Baking tips” section which follows the tables.

Main oven

Food	Dish	Shelf position	Type of heating	Temperature in °C	Baking time in minutes
Victoria sandwich	Wire rack + 2 x dia. 20 cm tins	3	*	160-170	20-25
Light fruit cake	Wire rack + deep tin, dia. 20 cm	2	*	150-160	80-90
Rich fruit cake	Wire rack + deep round tin, dia. 23 cm, or square tin, 20 cm	2	*	130-140	180-190
Fruit crumble	Wire rack + flat glass dish	3	*	160-170	40-45
Sponge cake (fat-free)	Wire rack + baking tin (dark coated)	2	*	160-170	30-40
Swiss roll	Wire rack + Swiss roll tin	3	*	170-180	10-12
Tart	Wire rack + plate or pie tin, dia. 20 cm	3	*	180-190	50-60
Quiche	Wire rack + quiche tin (dark coated)	3	*	180-190	40-45
(White) Bread	Wire rack + loaf tin (1 x 900 g or 2 x 450 g)	3	*	190-200	25-30
Scones	Universal pan	3	*	180-190	15-20
Biscuits	Universal pan	3	*	160-170	15-20
Small cakes	Wire rack + 12-cup tin	3	*	150-160	15-20
Jam tarts	Wire rack + 12-cup tin	2	*	180-190	15-20
Meringues	Universal pan	3	*	80-90	100-150
Pavlova	Universal pan	3	**	150**+ 100	100-150
Soufflé	Wire rack + 1.2 l soufflé dish	2	*	160-170	45-50
Pie	Wire rack + pie dish	3	*	180-190	45-50
Yorkshire pudding	Universal pan + 12-cup tin	3	*	190-200	15-20
Jacket potatoes	Universal pan	3	*	160-170	60-70
Pizza (homemade)	Universal pan	3	*	210-220	20-25

* preheat

** preheat at higher temperature, then reduce and insert food

Food	Dish	Shelf position	Type of heating	Temperature in °C	Time in minutes
Victoria sandwich, 2 levels	2 wire racks + 4 tins, dia. 20 cm	3+1	*	160-170	30-35
Scones, 2 levels	Universal pan + wire rack with baking tray	3+1	*	170-180	20-25
Biscuits, 2 levels	Universal pan + wire rack with baking tray	3+1	*	150-160	20-25
Biscuits, 3 levels	Universal pan + 2 wire racks with baking trays	5+3+1	*	140-150	25-30
Small cakes, 2 levels	2 wire racks + 2 x 12-cup tins	3+1	*	150-160	25-30
Meringues, 2 levels	Universal pan + wire rack with baking tray	3+1	*	80-90	100-150
Jacket potatoes, 2 levels	2 wire racks	3+1	*	160-170	60-75
(White) bread	2 wire racks + loaf tins (2 x 900 g or 4 x 450 g)	3+1	*	180-190	35-40
Pizza (homemade)	Universal pan + wire rack with baking tray	3+1	*	180-190	40-45

* Preheat.

Top oven

Food	Dish	Shelf position	Type of heating	Temperature in °C	Time in minutes
Victoria sandwich	Wire rack + 1 tin, dia. 20 cm	1	*	160-170	25-30
Scones	Wire rack + baking tray	1	*	200-210	10-12
Small cakes	Wire rack + 12-cup tin	1	*	150-160	25-30
Jam tarts	Wire rack + 12-cup tin	1	*	190-210	15-25
Swiss roll	Wire rack + Swiss roll tin	1	*	180-190	10-15
Biscuits	Wire rack + baking tray	1	*	170-180	10-15
Meringues	Wire rack + baking tray	1	*	80	110-140

* Preheat.

Baking tips

You wish to bake according to your own recipe.	Use similar items in the baking tables as a guide.
How to establish whether sponge cake is baked through.	Approximately 10 minutes before the end of the baking time specified in the recipe, stick a cocktail stick into the cake at the highest point. If the cocktail stick comes out clean, the cake is ready.
The cake collapses.	Use less fluid next time or set the oven temperature 10 degrees lower. Observe the specified mixing times in the recipe.
The cake has risen in the middle but is lower around the edge.	Do not grease the sides of the springform cake tin. After baking, loosen the cake carefully with a knife.
The cake goes too dark on top.	Place it lower in the oven, select a lower temperature and bake the cake for a little longer.
The cake is too dry.	When it is done, make small holes in the cake using a cocktail stick. Then drizzle fruit juice or an alcoholic beverage over it. Next time, select a temperature 10 degrees higher and reduce the baking time.
The bread or cake (e.g. cheesecake) looks good, but is soggy on the inside (sticky, streaked with water).	Use slightly less fluid next time and bake for slightly longer at a lower temperature. For cakes with a moist topping, bake the base first. Sprinkle it with almonds or bread crumbs and then place the topping on top. Please follow the recipe and baking times.
The cake is unevenly browned.	Select a slightly lower temperature to ensure that the cake is baked more evenly. Protruding greaseproof paper can affect the air circulation. For this reason, always cut greaseproof paper to fit the baking tray.
The bottom of a fruit cake is too light.	Place the cake one level lower the next time.
The fruit juice overflows.	Next time, use the deeper universal pan, if you have one.
Small baked items made out of yeast dough stick to one another when baking.	There should be a gap of approx. 2 cm around each item. This gives enough space for the baked items to expand well and turn brown on all sides.
You were baking on several levels. The items on the top baking tray are darker than that on the bottom baking tray.	Always use 3D hot air to bake on more than one level. Baking trays that are placed in the oven at the same time will not necessarily be ready at the same time.
Condensation forms when you bake moist cakes.	Baking may result in the formation of water vapour, which escapes above the door. The steam may settle and form water droplets on the control panel or on the fronts of adjacent units. This is a natural process.

Meat, poultry, fish

Ovenware

The universal pan with insert wire rack is suitable for large roasts. You may also use any heat-resistant ovenware.

Glass ovenware is the most suitable. Ensure that the lid of the roasting dish fits well and closes properly.

Add a little more liquid when using enamelled roasting dishes.

With roasting dishes made of stainless steel, browning is not so intense and the meat may be somewhat less well cooked. Increase the cooking times.

Always place the ovenware in the centre of the wire rack.

Place hot glass ovenware on a dry mat after cooking. The glass could crack if placed on a cold or wet surface.

Roasting

The information in the table applies to food placed in a cold oven and for meat taken directly from the refrigerator.

The joints of meat should weigh between 500 g and 2 kg.

Ensure that you always use the lower temperature, if the weight of the joint you wish to roast is high.

If there are several pieces of meat, calculate the roasting time using the weight of the heaviest piece of meat. The individual pieces of meat should be approximately the same size.

Meat

Turn pieces of meat halfway through the cooking time.

When the roast is ready, turn off the oven and allow it to rest for an additional 10 minutes. This allows better distribution of the meat juices.

After cooking, wrap sirloin in aluminium foil and leave it to rest for 10 minutes in the oven.

For roast pork with a rind, score the rind in a crossways pattern, then lay the roast in the dish with the rind at the bottom.

Main oven

Meat	Dish	Shelf position	Type of heating	Temperature in °C	Time, mins per 500 g + add. time
Beef					
Slow roast joint	Universal pan with roasting rack	1		130-140	40+40
Top side and top rump	Universal pan with roasting rack	1		160-170	30+25
Lamb					
Leg	Universal pan with roasting rack	1		160-170	30+25
Shoulder (on the bone)	Universal pan with roasting rack	1		160-170	25+20
Shoulder (boned and rolled)	Universal pan with roasting rack	1		170-180	25+25
Rack of lamb	Universal pan with roasting rack	1		180-190	25+25
Pork					
Roast joint	Universal pan with roasting rack	1		180-190	35+35
Loin joint	Universal pan with roasting rack	1		170-180	30+30
Belly	Universal pan with roasting rack	1		160-170	30+25
Gammon joint	Universal pan with roasting rack	1		160-170	30+30
Poultry					
Chicken	Universal pan with roasting rack	1		170-180	20+25
Chicken, portion	Universal pan with roasting rack	1		190-200	20+25
Chicken, quarter (450 g each)	Universal pan with roasting rack	1		180-190	20+25
Duck	Universal pan with roasting rack	1		180-190	20+20
Turkey, crown	Universal pan with roasting rack	1		160-170	15+15
Casserole					
Diced meat (beef, pork, lamb)	Wire rack + glass roasting dish with lid	2		140	120-150 total time
Braising steaks	Wire rack + glass roasting dish with lid	2		140	120-150 total time
Chicken	Wire rack + glass roasting dish with lid	2		140	60-90
Complete Meal					
With beef	Wire rack Universal pan with roasting rack	4 1		160, then 200 (Yorkshire pudding)	Weight of meat (see table above) + 15-25 for Yorkshire pudding
With chicken	Wire rack Universal pan with roasting rack	4 1		180	Weight of chicken (see table above)

Tips for grilling

Always grill with the oven door closed.

Place the food to be grilled directly on the wire rack. If you are grilling a single piece of food, the best results are achieved by placing it in the centre of the wire rack. The universal pan should also be inserted underneath. The meat juices are collected in the pan and the oven is kept cleaner.

If possible, grill items should be of equal thickness. This ensures that they brown evenly while also remaining succulent. Only add salt to steaks once they have been grilled.

Turn grilled items after the specified time.

Whole fish does not need to be turned. Place the whole fish in the oven in its swimming position with its dorsal fin facing upwards. Placing a scored potato or a small oven-proof container in the stomach cavity of the fish will provide stability.

The grill element switches on and off intermittently. This is normal. How often this happens depends on the selected grill setting.

Top oven

Observe the notes in the table about preheating.

Food	Dish	Shelf position	Type of heating	Grill setting	Time in minutes
Beef					
Steaks 2-3 cm thick	Wire rack + universal pan	2+ 1	*	3	1st side 10-13, 2nd side 6-8
Burgers 1-2 cm thick	Wire rack + universal pan	2+ 1		3	1st side 10-12, 2nd side 6-8
Lamb					
Steaks 2-3 cm thick	Wire rack + universal pan	2+ 1	*	3	1st side 6-8, 2nd side 4-6
Chops 2-3 cm thick	Wire rack + universal pan	2+ 1	*	3	1st side 7-9, 2nd side 5-8
Pork					
Steaks 1-2 cm thick	Wire rack + universal pan	2+ 1	*	3	1st side 9-12, 2nd side 6-8
Chops 2-3 cm thick	Wire rack + universal pan	2+ 1	*	3	1st side 10-13, 2nd side 8-12
Burgers 1-2 cm thick	Wire rack + universal pan	2+ 1		3	1st side 10-12, 2nd side 6-8
Sausages 2-4 cm thick	Wire rack + universal pan	2+ 1		3	14 - -18**
Chicken					
Drumsticks 150 g each	Wire rack + universal pan	2+ 1		2	1st side 16-20, 2nd side 12-15
Breast (boneless) 150 g each	Wire rack + universal pan	2+ 1		2	1st side 13-15, 2nd side 8-10
Fish					
Whole trout 300 g each	Wire rack + universal pan	2+ 1		1	25-30
Fillets 150 g each	Wire rack + universal pan	2+ 1		1	15-20

* Preheat for 3 minutes

** Turn frequently

Tips for roasting and grilling

The table does not contain information for the weight of the joint.	Select the next lowest weight from the instructions and extend the time.
How to tell when the roast is ready.	Use a meat thermometer (available from specialist shops) or carry out a “spoon test”. Press down on the roast with a spoon. If it feels firm, it is ready. If the spoon can be pressed in, it needs to be cooked for a little longer.
The roast is too dark and the crackling is partly burnt.	Check the shelf height and temperature.
The roast looks good but the juices are burnt.	Next time, use a smaller roasting dish or add more liquid.
The roast looks good but the juices are too clear and watery.	Next time, use a larger roasting dish and use less liquid.
Steam rises from the roast when basted.	This is normal and due to the laws of physics. The majority of the steam escapes through the steam outlet. It may settle and form condensation on the cooler switch panel or on the fronts of adjacent units.

Preprepared products

Observe the instructions on the packaging.

If you line the accessories with greaseproof paper, make sure that the paper is suitable for these temperatures. Make sure the paper is a suitable size for the dish to be cooked.

The cooking result greatly depends on the quality of the food. Pre-browning and unevenness can sometimes even be found on the raw product.

Leave a little space between bread rolls when crisping them up. Do not place too many bread rolls on the accessories.

Sprinkle grated cheese over the top of your lasagne to give it a beautiful and evenly browned finish.

Main oven

Food	Dish	Shelf position	Type of heating	Temperature in °C	Time in minutes
Pizza, frozen					
Pizza with a thin base	Universal pan	3	*	200-210	10-15
	Universal pan + wire rack	3+1	*	170-180	20-25
Pizza with a thick base	Universal pan	3	*	200-210	15-20
	Universal pan + wire rack	3+1	*	170-180	20-25
Pizza baguette	Universal pan	3	*	170-180	25-30
Pizza, chilled	Universal pan	1	*	200-210	10-15
Potato products, frozen					
Chips	Universal pan	3	*	210-220	20-25
	Universal pan + wire rack	3+1	*	180-190	30-35
Duchess potatoes	Universal pan	3	*	200-210	15-20
Hash browns (fried potatoes), filled potato skins	Universal pan	3	*	200-210	15-20
Potato wedges	Universal pan	3	*	190-210	20-25
Baked goods, frozen					
Rolls, baguettes	Universal pan	3	*	180-190	10-15
Baked goods, prebaked					
Part-baked white bread	Universal pan	3	*	180-190	15-20
	Universal pan + wire rack	3+1	*	160-170	20-25
Fried foods, frozen					
Fish fingers	Universal pan	3	*	200-210	15-20
Chicken nuggets	Universal pan	3	*	170-180	20-25
Food, frozen					
Lasagne, 400 g	Wire rack	2	*	180-190	35-40
Lasagne, 1200 g	Wire rack	2	*	180-190	40-50
Food, chilled					
Lasagne, 400 g	Wire rack	2	*	170-180	25-30
Lasagne, 1200 g	Wire rack	2	*	170-180	30-35

* preheat

Special dishes

At low temperatures, 3D hot air is equally useful for producing creamy yoghurt as it is for proving light yeast dough.

First, remove accessories, hook-in racks or telescopic shelves from the cooking compartment.

Preparing yoghurt

1. Bring 1 litre of milk (3.5 % fat) to the boil and cool down to 40 °C.
2. Stir in 150 g of yoghurt (chilled).
3. Pour into cups or small screw-top jars and cover with cling film.
4. Preheat the cooking compartment as indicated.
5. Place the cups or jars on the cooking compartment floor and incubate as indicated.

Proving dough

1. Prepare the dough as usual, place it in a heat-resistant ceramic dish and cover.
2. Preheat the cooking compartment as indicated.
3. Switch off the oven and place the dough in the cooking compartment and leave it to prove.

Main oven

Meal	Cookware		Type of heating	Temperature	Cooking time
Yoghurt	Cups or screw-top jars	Place on the cooking compartment floor		Preheat to 50 °C 50 °C	5 mins 8 hrs
Proving dough	Heat-resistant dish	Place on the cooking compartment floor		Preheat to 50 °C Switch off the appliance and place the yeast dough in the cooking compartment	5-10 mins 20-30 mins

Upper oven

Meal	Cookware	Level	Type of heating	Temperature	Cooking time
Yoghurt	Cups or screw-top jars	Place on the cooking compartment floor		Preheat to 100 °C Switch on the oven light	15 mins approx. 8 hrs

Defrost

The defrosting time will depend on the type and quantity of the food.

Observe the instructions on the packaging.

Take frozen food out of its packaging and place in a suitable dish on the wire rack.

Place poultry on a plate with the breast side facing down.

Frozen food	Accessories	Level	Type of heating	Temperature
e.g. cream cakes, buttercream cakes, gateaux with chocolate or sugar icing, fruit, chicken, sausage and meat, bread and bread rolls, cakes and other baked items	Wire rack	1		The temperature selector remains switched off

Drying

With 3D hot air, you can dry foods brilliantly.

Use unblemished fruit and vegetables only and wash them thoroughly.

Drain off the excess water, then dry them.

Line the universal pan and the wire rack with greaseproof or parchment paper.

Turn very juicy fruit or vegetables several times.

Remove fruit and vegetables from the paper as soon as they have dried.

Fruit and herbs	Accessories	Level	Type of heating	Temperature	Cooking time
600 g apple rings	Universal pan + rack	3+1		80 °C	5 hrs (approx.)
800 g pear slices	Universal pan + rack	3+1		80 °C	8 hrs (approx.)
1.5 kg damsons or plums	Universal pan + rack	3+1		80 °C	8-10 hrs (approx.)
200 g herbs, washed	Universal pan + rack	3+1		80 °C	1½ hrs (approx.)

Acrylamide in foodstuffs

Acrylamide is mainly produced in grain and potato products prepared at high temperatures, such as potato crisps, chips, toast, bread rolls, bread or fine baked goods (biscuits, gingerbread, cookies).

Tips for keeping acrylamide to a minimum when preparing food	
General	■ Keep cooking times to a minimum. ■ Cook meals until they are golden brown, but not too dark. ■ Large, thick pieces of food contain less acrylamide.
Baking	With top/bottom heating max. 200 °C. With 3D hot air or hot air max.180 °C.
Biscuits	With top/bottom heating max. 190 °C. With 3D hot air or hot air max. 170 °C. Egg or egg yolk reduces the production of acrylamide.
Oven chips	Spread evenly over the baking tray, in a single layer. Bake at least 400 g per baking tray so that the chips do not dry out

Test dishes

These tables have been produced for test institutes to facilitate the inspection and testing of the various appliances.

In accordance with EN 50304/EN 60350 (2009) and IEC 60350.

Baking

When baking on 2 levels, always insert the universal pan above the baking tray.

When baking on 3 levels, insert the universal pan in the centre of the oven.

German apple pie on 2 levels:
place dark springform cake tins one above the other.

German apple pie on 1 level:
place dark springform cake tins next to each other diagonally.

Note: For baking, use the lower of the temperatures indicated first.

Main oven

Meal	Accessories and tins	Level	Type of heating	Temperature in °C	Cooking time in minutes
Piped cookies	baking tray	3		160-180	20-30
	Universal pan + baking tray	3+1		150-170	30-40
	Universal pan + 2 baking trays	5+3+1		140-160	40-45
Small cakes	baking tray	3		160-180	20-25
Small cakes (preheat)	Universal pan + baking tray	3+1		150-170	30-35
	Universal pan + 2 baking trays	5+3+1		140-160	30-35
Hot water sponge cake	Springform cake tin on the wire rack	2		160-180	30-40
German apple pie	Wire rack + 2 dark springform cake tins, dia. 20 cm	3		170-190	60-70
	2 wire racks + 2 dark springform cake tins, dia. 20 cm	3+1		190-210	70-80

Grilling

If you are grilling food directly on the wire rack, the universal pan should also be inserted at level 1. The liquid is then collected, keeping the oven cleaner.

Top oven

Meal	Accessories and cook-ware	Level	Type of heating	Grill setting	Duration in minutes
Making toast, preheat for 10 minutes	wire rack	2		3	0.5-2
Beefburgers, 12 pieces*, do not preheat	Wire rack + Universal pan	2+ 1		3	25-30

* turn over after ⅔ of the cooking time.

Robert Bosch Hausgeräte GmbH
Carl-Wery-Straße 34
81739 München
Germany
www.bosch-home.com

9000715710

920228