BWDI1206
Fully integrated washer dryer

INSTRUCTION MANUAL

Baumatic®

USER MANUAL FOR YOUR BAUMATIC

BWDI1206

Fully integrated washer dryer

Baumatic®

NOTE: ***This User Instruction Manual contains important information, including safety & installation points, which will enable you to get the most out of your appliance. Please keep it in a safe place so that it is easily available for future reference.***

GS 15/10/12

Contents

Environmental note	4
Important safety information	5 - 7
Specifications	7 – 13
Product and aperture dimensions	7
Product specifications	7 – 8
Baumatic consumables	8
Control panel	9 - 12
Detergent drawer	12 - 13
Preparing the wash cycle	13 - 20
Preparing your garments for washing	13 - 14
A selection of wash care symbols	14 - 15
Detergents and conditioners	15
Program table	16 – 17
Program description	17 – 19
Wash program guidance	20
Selecting a wash program	20 - 22
Cancelling or pausing a wash program	21
Delay start feature	21 – 22
Time remaining indicator	22
Selecting a drying program	22 – 24
Table of drying times (in minutes)	24
Selecting an automatic washing / drying program	24 – 25
The washer dryer door	25
Saving energy when using your washer dryer	26
Automatic consumption reduction	26
Removing stains	26
Stain removal rules	27
Stain removal guide	27 - 28
Maintenance and cleaning	29 - 31
In daily use	29
Control panel and washer dryer cabinet	29
Detergent drawer	29 - 30
The washer dryer drum	30
Door	30
90 degree maintenance wash	30
Cleaning the filter	31
Long periods of not in use	31
General troubleshooting	32 - 33
Poor wash results	33 - 34
Installation	34 - 41
Unpacking and removing the transit bolts	34 - 35
Positioning and levelling the appliance	36 - 37
Fitting the décor door	37 - 38
Connecting to the mains water supply	39
Water outlet	39 - 40
Power supply	40
Before first use maintenance wash	41
Baumatic consumables	42
Contact details	43

Environmental note

***Note**: Before discarding an old appliance, switch off and disconnect it from the power supply. Cut off and render any plug useless. Cut the cable off directly behind the appliance to prevent misuse. This should be undertaken by a competent person. Disable the door lock to make sure that children cannot get stuck inside the appliance.*

This appliance is marked according to the European directive 2002/96/EC on Waste electrical and Electronic Equipment (WEEE). By ensuring this product is disposed of correctly, you will help prevent potential negative consequences for the environment and human health, which could otherwise be caused by inappropriate waste handling of this product.

The symbol on the product, or on the documents accompanying the product, indicates that this appliance may not be treated as household waste. Instead it shall be handed over to the applicable collection point for the recycling of electrical and electronic equipment.

Disposal must be carried out in accordance with local environmental regulations for waste disposal.
For more detailed information about treatment, recovery and recycling of this product, please contact your local city office, your household waste disposal service or the shop where you purchased the product.

Important safety information

Your safety is of the utmost importance to Baumatic. Please make sure that you read this instruction booklet ***before*** attempting to install or use the appliance. If you are unsure of any of the information contained in this booklet, please contact the Baumatic Customer Care Department.

General Safety

- Repairs to your appliance must only be carried out by a Baumatic engineer or one of its authorised service agents. Any attempt by an inexperienced person to repair the appliance, could result in injury or damage to your washing machine.

- If you notice that the mains cable is damaged. ***The appliance must not be used.*** The same applies if you notice that the worktop, control panel or base area is damaged. As this could allow access to the internal components of the machine.

- The appliance should be switched off and isolated from the mains supply, before either cleaning or maintenance work is attempted.

- The mains cable must not be used to pull the plug out of the electrical socket.

- The machine should not be sprayed with water.

- The glass of the porthole door may become hot during the higher temperature wash programs.

- The machine should be allowed to cool before carrying out an emergency drain or cleaning the drain filter.

- It is possible for small animals to chew either mains cables or water hoses, which could cause an electric shock hazard.

Installation

- The installation instructions contained within this user manual should be followed.

- It is obligatory for the completed installation to comply with all relevant building regulations and local water authority requirements.

- ***Before the first use of the appliance, we advise that a 90°C cotton wash is completed. No garments should be placed inside the machine; however a small amount of detergent must be used.***

During Use

- It is recommended that the appliance is unplugged and the water supply is switched off after the machine is used.

- This appliance is only designed to wash and dry normal domestic washloads. If you use your washer dryer in any other way or it is incorrectly used, then Baumatic accepts no liability for any damage that might be caused and any guarantee will be void.

- No attempt should be made to alter or modify the specifications of this appliance.

- The detergents that you place in this appliance should be suitable for automatic washer dryers. With regards to dosage levels, the detergent manufacturer's recommendations should be followed.

- You should not wash garments that have been in contact with flammable materials.

- Your washer dryer should not be used for dry cleaning.

- If you use either dyes or bleaching agents inside this machine, then you should consult with the manufacturer of these products to make sure they are suitable for use in your washer dryer. Baumatic cannot be held responsible for any damage that may result.

- Items such as foam rubber, shower caps, waterproof textiles, rubber backed articles and clothes or pillows fitted with foam rubber pads should not be dried in the washer dryer.

- Never stop the washer dryer before the end of the drying cycle unless all items are quickly removed and spread out so that the heat is dissipated.

Child Safety

- Your washer dryer should only be used by adults. You should not allow children in the area of the machine unsupervised. You should not let them touch the controls or play with the appliance.

- It could be possible for a child or pet to gain access to the washer dryer through the porthole door. Therefore please check the drum before using the appliance.

- Any packaging that is removed from the machine should be kept away from children.

- All detergents should be kept out of children's reach in a safe place.

Specifications

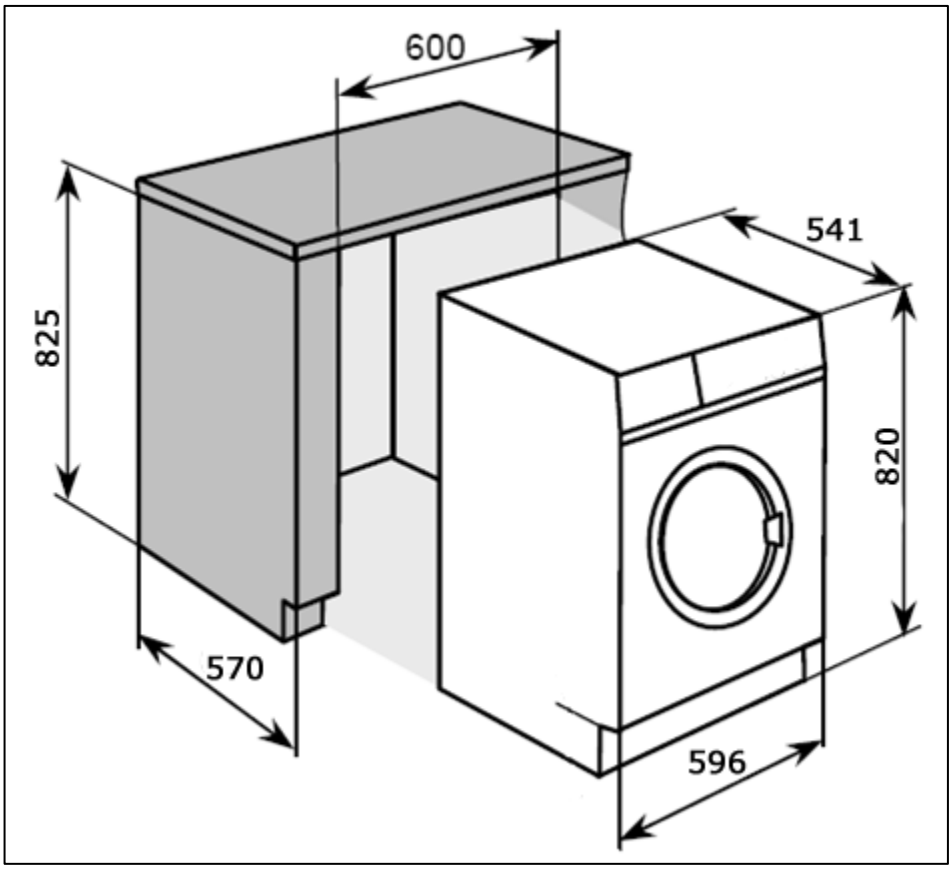

Product dimensions

Height: 820 mm
Width: 596 mm
Depth: 541 mm

Aperture dimensions

Height: 825 mm
Width: 600 mm
Depth: 570 mm

- Wash load capacity: 6 kg
- Dry load capacity: 4 kg
- Maximum spin speed: 1200 rpm
- Variable spin speed with no spin option
- Separate temperature control
- Drum size: 56 litres
- Porthole diameter: 30 mm

- 180° door opening
- LED display
- Digital countdown indicator
- Door closed indicator
- Delay start
- Automatic consumption reduction
- Self adjusting water level to load
- Imbalance control system
- Overflow protection
- Foam protection
- Safety lock
- Fuzzy logic
- Adjustable feet

4 Option buttons:	Stain remover
	Extra rinse
	Cold wash
	Anti-crease

Energy efficiency:

Energy efficiency class (wash only)	A
Energy efficiency class (wash and dry)	B
Washing performance class	A
Water extraction performance class	B

Control panel

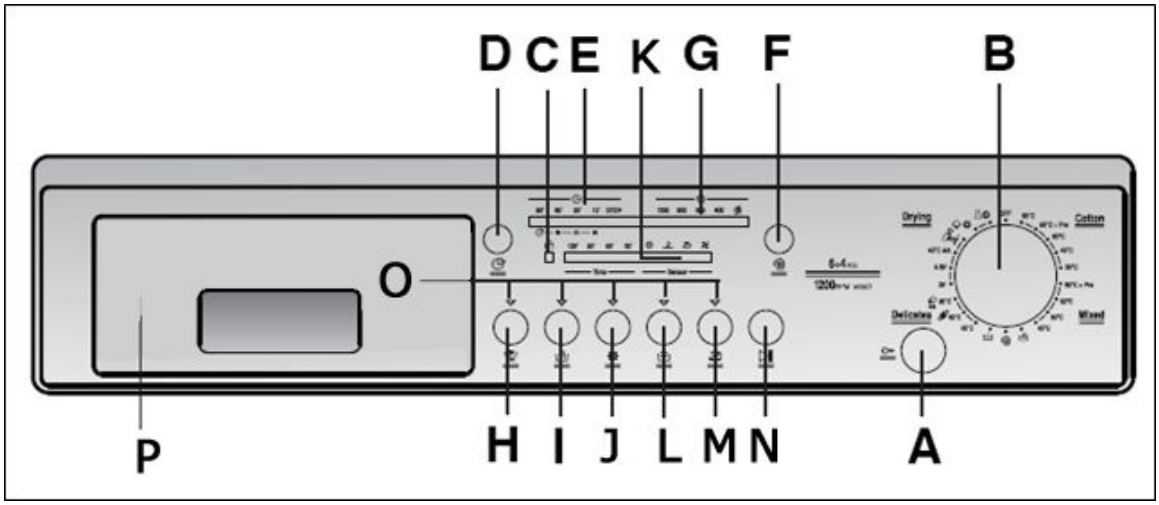

A) Door open button
B) Program selection knob
C) Door lock indicator light
D) Delay start button
E) Delay start indicator light
F) Spin speed selection button
G) Spin speed indicator light
H) Stain remover button
I) Extra rinse button
J) Drying program selection button
K) Drying program indicators
L) Cold wash button
M) Anti-crease button
N) Start / Pause button
O) Button indicator lights
P) Detergent drawer

Door open button

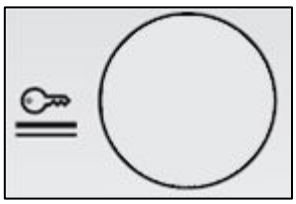

A safety device prevents the door from being opened immediately after the end of the cycle. You should wait for 2 minutes after the program has finished and ensure the door security light on the cycle progress indicator has gone out before opening the door. ***If the door is not closed, the indicator will continue to flash.***

Program selection knob

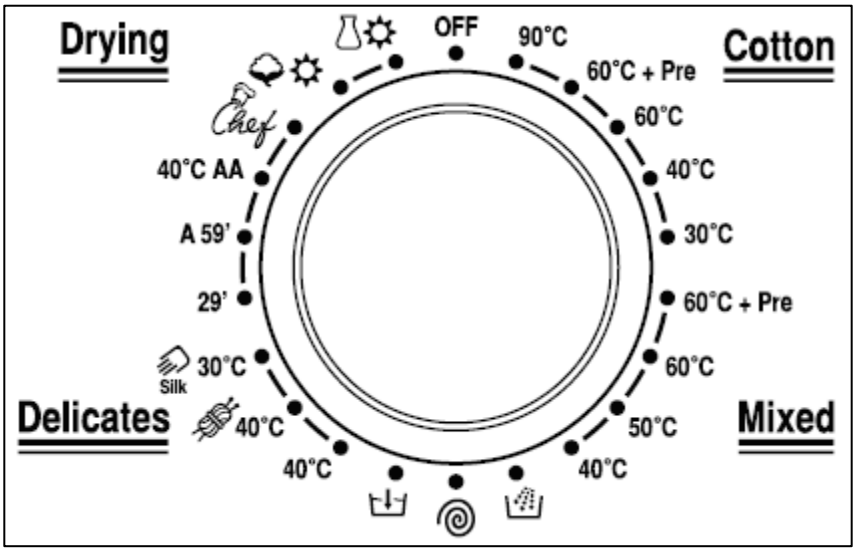

This control knob allows you to select the washing or drying program of your choice. You can rotate the knob in both directions.

Delay start button

This button can be used to program a delay start of 3, 6 or 9 hours. The relevant indicator will light to show your selection. See the section "Delay start feature" on pages 21-22 for instructions.

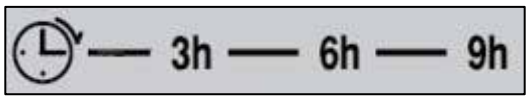

Spin speed selection button

The spin cycle is important to remove as much water as possible from the laundry without damaging the fabrics. You can adjust the spin speed of the machine to reduce the maximum speed. The relevant indicator will light to show your selection.

You can use the button to light this symbol to select "No Spin".

Stain remover button

This option is recommended for heavily soiled loads. The machine rotates in such a way as to distribute the detergent evenly during the wash and rinse procedures. The spin speed increases to maximise the cleaning action. This option ensures a more intensive washing cycle to remove stains without lengthening the program time.

Extra rinse button

This button will program the machine to add an additional rinse to the cycle. This function is ideal for people with sensitive skin as it removes more of the detergent from washing. It is advisable to use this function for very dirty loads where extra detergent has been used. This option can be used only on some programs.

Drying program selection button

Press this button to select the required drying program. The relevant indicator will light to show your selection. See the "Selecting a drying program" section of this manual on pages 22-25 for instructions for setting a drying cycle.

Cold wash button

By pressing this button it is possible to change every program into a cold wash one without altering the water level, time or spin speed. Curtains, small carpets, delicate fabrics and non colour fast garments can be safely washed with this feature.

Anti-crease button

Use this button to select the anti-crease function. This will minimise creases in mixed fabrics, delicate fabrics and woollens and silk. It works in the following ways:

Fabric (according to program selected)	***Process***
Mixed fabrics	The water is gradually cooled throughout the final 2 rinses with no spinning and then a delicate spin assures the maximum relaxation of the fabrics.
Delicate fabrics	The final 2 rinses are carried out with no spinning and then the fabrics are left in water until it is time to unload. When you are ready to unload, press the anti-crease button **(M)** to drain.

Woollens / silk	After the final rinse the fabrics are left in water until it is time to unload. When you are ready to unload, press the anti-crease button **(M)** to drain and spin.

Start / pause button

This button should be used to start the chosen wash program. When the button is pressed, the appliance will begin the cycle within a few seconds. You can also press this button to pause a wash cycle in progress and continue after. ***When a program is selected, wait for the STOP light to flash before pressing the Start / Pause button.***

Detergent drawer

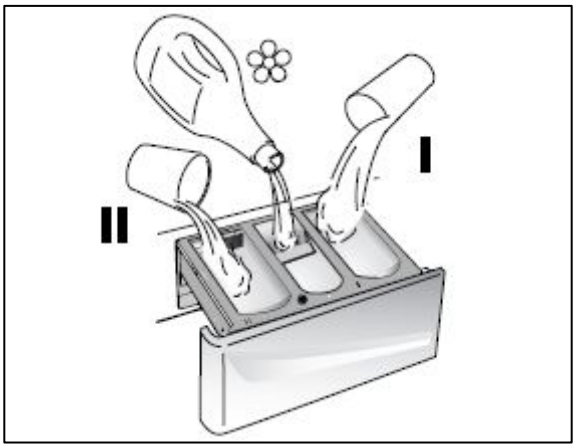

Pre wash section

This compartment should have detergent placed in it, if you are going to select a wash program that has a pre wash as part of it.

Main wash section

This compartment should have detergent placed in it (you should also put a water softening agent in this section, if you use one). The detergent will be added to the drum at the start of the main wash program.

Conditioner section

This compartment should be used for liquid conditioners (fabric softener, starch). They will be added to the wash load during the final rinse.

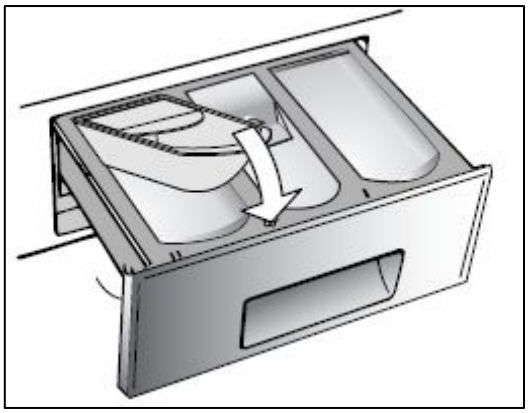

- If liquid detergents are used, insert the special container supplied into the compartment labelled “II”.
- This ensures that the liquid detergent enters the drum at the right stage of the wash cycle.

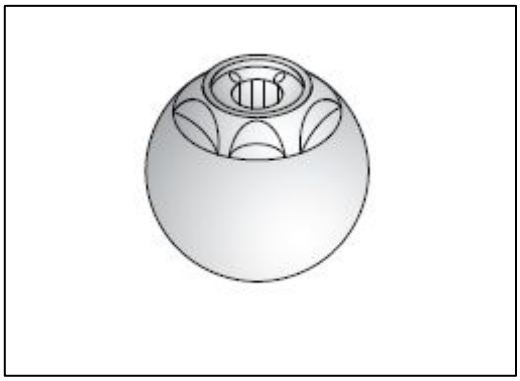

- Some detergents are difficult to utilise. You can use them in a drum dispenser if recommended by the detergent manufacturer.

IMPORTANT: Only put liquid products in the conditioner compartment.

Preparing the wash cycle

Preparing your garments for washing

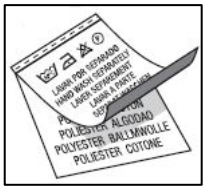

- Your washing should be sorted out, according to the fabric type and the wash care symbol that is printed on the garment’s wash care label. (See the “A selection of wash care symbols” section on pages 14-15).

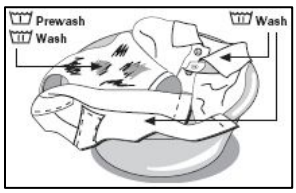

- Your washing should also be sorted out according to the degree of soiling.

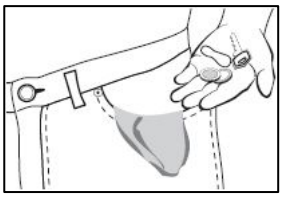

- Check all pockets on a garment to make sure that they are empty.
- Remove any detachable metal items (badges, paperclips, safety pins etc).
- Zips should be closed, duvet covers and pillow cases should be buttoned up and any loose straps should be tied up. This will

help to prevent other garments from getting damaged during the wash.

- Woollens and knitted coloured fabrics should be turned inside out before being washed in the appliance.

- Small delicate items (tights, baby socks) should be placed in either a washing net or a zipped pillow case.

- Curtains should be handled with particular care. All plastic hooks or metal strips must be removed before being washed in the appliance.

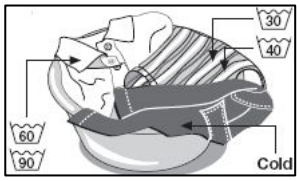

- Coloured items and whites should be washed in separate wash cycles.

- New garments often contain an excess of dye, therefore it is advisable to wash them separately for their first wash.

- Garments should be unfolded and shook out before being placed inside the machine.

A selection of wash care symbols

Washing	Boiling temp 95°C	Normal temp 60°C	Normal temp 40°C	Do not wash!	Bleachable in cold water	Do not bleach!	Wool seal
Dry cleaning	Delicate temp 30°C	Delicate temp 40°C	Hand wash only	All solvents	All but TRI	Benzine only	Do not clean!
Spin dryer	Normal	Low	High	Do not dry!	Hang to dry	Drip dry	Dry flat
Ironing	110°C	150°C	200°C	Do not iron!			

- The wash care symbols should be used to help you to select the most suitable wash program. They will also help you to sort your laundry into different loads, depending on the fabric type and the highest temperature which the garment can be washed at.

- If the wash care label does not appear in the table on the previous page, then please refer to the program table on pages 16-17. This gives more detailed descriptions of the types of fabric that are suitable to be washed using a particular wash program.

Detergents and conditioners

The amount of detergent that you need to use in your appliance, will depend on

- ***The degree of soiling.*** Lightly soiled garments in general require less detergent.

- ***The size of the wash load.*** A smaller wash load will require a reduction in the amount of detergent.

- ***The hardness of your tap water.*** The harder your water is, then the more detergent you will need to use. The detergent manufacturers normally give guidance as to how much extra detergent should be used, depending on the hardness of the water.

Liquid detergent

If you are using liquid detergent, then in the majority of cases the liquid should be placed inside the dosing device supplied by the detergent manufacturer. All instructions on the detergent packaging should be followed.

Water softening agents

If your tap water is hard, then it may be prudent to utilise a water softening agent. This will help to ensure that the appliance does not become clogged with hard water deposits. You may also find that it will allow you to lessen the amount of detergent that you are using.

When using any detergent or water softening agent, the recommendations of the manufacturers should be followed.

Program table

Program	***Laundry***	***Control knob position***	***MAX weight (kg)***	***Default Operation Time (Mins)***	***Temperature (°C)***	***Detergent drawer***		
						▌▌	❀	▌
Resistant fabrics (cotton, linen)	Whites	90°C	6	170	90	Yes	Yes	No
Cotton, mixed resistant	Whites with pre-wash	60°+ Pre	6	200	60	Yes	Yes	Yes
Cotton, mixed	Fast coloureds	60°C	6	180	60	Yes	Yes	No
	Non-fast coloureds	40°C	6	130	40	Yes	Yes	No
	Delicates	30°C	6	110	30	Yes	Yes	No
Mixed fabrics and synthetics (mixed, resistant)	Fast coloureds with pre-wash	60°C+ Pre	3	105	60	Yes	Yes	Yes
Cotton, mixed fabrics, synthetics	Fast coloureds	60°C	3	100	60	Yes	Yes	No
Synthetics (nylon, perlon, mixed cotton)	Synthetics	50°C	3	95	50	Yes	Yes	No
	Non-fast coloureds	40°C	3	85	40	Yes	Yes	No
	Rinse		-	25	-	No	Yes	No
	Fast spin		-	9	-	No	No	No
	Drain only		-	4	-	No	No	No
Very delicate fabrics	Delicates	40°C	1.5	60	40	Yes	Yes	No
	Machine washable woollens	40°C	1	50	40	Yes	Yes	No
	Silk/Hand wash	Silk 30°C	1	50	30	Yes	Yes	No
Specials	Rapid 29 minutes	29’	2	29	30	Yes	Yes	No
	Resistant fabrics	A 59’	3	59	60	Yes	Yes	No
	Resistant fabrics	40°C AA	6	120	40	Yes	Yes	No

	“Chef”		6	108	40	Yes	Yes	No
	Cotton drying		4	180	-	-	-	-
	Mixed drying		3	140	-	-	-	-

Program description

Cotton

- The cotton program is designed for maximum washing and rinsing efficiency. With spin cycles in between, the program guarantees the laundry is rinsed thoroughly. The final spin cycle ensures laundry is spun dry as much as possible up to the maximum speed.

Mixed

- The main wash and rinse gives the best results due to the rotation rhythms of the drum and the water levels.
- A gentle spin ensures the fabrics become less creased.

Delicates

40°C

- This cycle alternates washing and soaking and is recommended for very delicate fabrics.
- The wash cycle and rinses are carried out with high water levels to ensure best results.

40°C

- This cycle enables you to thoroughly wash woollen garments without damaging them.
- The cycle consists of alternate periods of activity and pauses.

30°C Silk

- This program allows a complete washing cycle for garments specified as “Hand-wash only” and laundry items made from silk on the fabric label.

- This cycle has a maximum temperature of 30°C and concludes with 3 final rinses and no final spin.

29’

- This program allows a complete washing cycle to be carried out in approximately 30 minutes. We recommend that you only use 20% of the recommended quantities shown on detergent packaging for this program.

A 59’

- This program maintains the high quality wash performance associated with the “A” rating whilst greatly reducing the wash time.

40°C AA

- This program is designed to obtain the same washing performance, even at full load, as the 60°C Cotton program but with the advantage of saving energy by washing at 40°C.

Chef

- This program enables you to wash together different types of fabrics e.g. cotton and synthetic fast coloureds.

- The cycle washes while saving energy by using a temperature of 40°C and alternating spin action with soaking phases.

- This program carries out 3 rinses with an intermediate spin which can be reduced or excluded using the spin speed control button **(F)**.

- The cycle can be used for rinsing any type of fabric or after hand-washing. This program can also be used as a bleaching cycle.

- The spin program carries out a maximum spin which can be reduced using the spin speed control button **(F)**.

- This program drains out the water.

- A high temperature drying program for cottons and linens. Always refer to the care label.

- A low temperature drying program for synthetics and mixed fibres. Always refer to the care label.

Wash program guidance

- The washer dryer automatically selects a spin speed for a particular wash program. However it is possible to reduce the spin speed by using the spin reduction feature.

- ***Important:*** *You should make sure that the selected spin speed is appropriate for the garments that you are washing.*

- If you use the spin reduction feature, you can make the machine not go into a spin cycle. If you pick this option, then the machine will stop with water in the drum.

- ***Important:*** *Before opening the door of the appliance, you MUST select the drain program to clear this water.*

- The LED display indicates an approximate time remaining for the selected wash cycle. Please note that factors external to the machine, e.g. the temperature of your water supply, your water pressure etc. can affect the time it takes for the wash cycle to complete.

Selecting a wash program

- Load your laundry into the machine and put detergent in the relevant compartment of the soap drawer. Please refer to the program table on pages 16-17 for maximum load weights.

- Close the porthole door firmly.

- Select the most appropriate wash program for the garments that you are washing, by turning the program selection knob **(B)**.

- Select any program options by using the stain remover button **(H)**, extra rinse button **(I)**, cold wash button **(L)** or anti-crease button **(M)**.

- Any program option that you select, will affect the length of time that the wash cycle will take to complete.

- Alter the spin speed if required, using the spin speed selection button **(F).**

- Press the Start / Pause button **(N)**.

- After approximately 5 seconds, you will hear your washer dryer start the wash cycle.

- ***If there is a power failure or the plug is pulled out of the socket when a wash cycle is in progress. Once power has been restored, the wash program will continue.***

- Whilst the wash program is in progress, the time remaining to the end of the wash cycle will show on the display.

- At the end of the program, the “Stop” indicator light with come on. You should wait about 2 minutes for the door lock to be released. The door lock indicator light **(C)** will go out.

- Switch off the machine by turning the program selection knob **(B)** to the OFF position. Open the door and remove the laundry. Turn off the water tap.

Cancelling or pausing a wash program

- To stop a wash program once a wash cycle is in progress, you should press and hold the Start / Pause button **(N)** for about 2 seconds.

- To cancel the program, turn the program selection knob **(B)** to the OFF position.

- If you wish to add or remove items the door will remain locked for two minutes before it is possible to open the door.

- Close the door and press the Start / Pause button **(N)** to continue the wash cycle.

Before opening the porthole door, you MUST drain the appliance; otherwise there may still be water in the drum when you open the door.

Delay start feature

Your appliance has a delay start feature, which allows you to pause the start of a wash cycle until a later time. You can delay the start time by 3, 6 or 9 hours.

- Follow the process listed under “Selecting a wash program” on pages 20-21.

- Before pressing the Start / Pause button **(N)**, you should select the length of time that you want to delay the wash program for by pressing the delay start button **(D)**. The relevant LED will light on the display to show the set delay time.

- Press the Start / Pause button **(N)** to begin the delay countdown. The indicator light for the chosen delay time will stop blinking and remain on.

- At the end of the required delay time, the chosen program will begin.

- To cancel a time delay that has been set, you should press and hold the delay start button **(D)** until the indicator light goes OFF and the stop light blinks.

- You can then start the program manually by pressing the Start / Pause button **(N)** or switch the appliance off by turning the program selection knob **(B)** to the OFF position.

Time remaining indicator

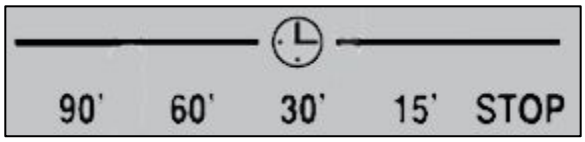

- The machine features an indicator light system that shows the remaining time for a wash or dry cycle.

- ***Indicator light 90:*** Remaining time above 60 minutes.

- ***Indicator light 60:*** Remaining time less than 60 minutes.

- ***Indicator light 30:*** Remaining time less than 30 minutes.

- ***Indicator light 15:*** Remaining time less than 15 minutes.

- ***Indicator light STOP:*** End of the program.

Selecting a drying program

- ***IMPORTANT: This dryer can only be used for laundry which has been washed and spin dried. Do not dry garments made from foam rubber or flammable materials.***

- ***IMPORTANT: Do not dry woollen garments or items with special padding such as quilts or quilted anoraks. For delicate fabrics you should load less items to prevent creasing.***

- During a drying cycle, the drum will accelerate to a higher speed to distribute the load and to optimize the drying performance.

- Load your laundry into the machine. Please refer to the program table on pages 16-17 for maximum load weights. Although, if you are drying large items such as sheets or very absorbent items such as towels or jeans, it is advised that you reduce the load size for optimum performance.

- Close the porthole door firmly.

- Select the most appropriate drying program for the garments that you are drying, by turning the program selection knob **(B)**.

- The washer dryer can perform two types of drying:

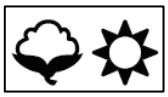
For cotton, terry towelling, linen and hemp fabrics.

For mixed fabrics (synthetics / cotton) and synthetic fabrics.

- You can then select the degree of dryness that you require by pressing the drying program selection button **(J)**.

Extra Dry: Recommended for towels, bathrobes and bulky loads.

Cupboard Dry: For items that can be put away without ironing.

Iron Dry: Leaves laundry suitable for ironing.

- If you wish, you can select a timed drying cycle by pressing the drying program selection button **(J)** and choosing from the times shown on the indicator lights. You can choose a 30, 60, 90 or 120 minute cycle.

- Press the Start / Pause button **(N)** and the drying cycle will begin. The relevant program indicator light will remain on and the time remaining indicator will show the time left until the end of the program.

This indicator will light in the last 10 minutes of the cycle to show that the machine is in the cool down phase.

- At the end of the program, the STOP indicator light will come on. You should wait about 2 minutes for the door lock to be released. The door lock indicator light **(C)** will go out.

- Switch off the machine by turning the program selection knob **(B)** to the OFF position. Open the door and remove the laundry. Turn off the water tap.

- ***IMPORTANT: Never open the door after the drying cycle has begun. You should wait until the cool down period is completed.***

Table of drying times (in minutes)

Program	***Cotton***		***Mixed***	
	MIN 1 kg	***MAX 4 kg***	***MIN 1 kg***	***MAX 3 kg***
Extra Dry	From 30	To 230	From 30	To 170
Cupboard Dry	From 30	To 220	From 30	To 150
Iron Dry	From 30	To 170	From 30	To 80

Selecting an automatic washing / drying program

- ***IMPORTANT: Only a maximum load size of 4 kg can be loaded into the machine for optimum performance.***

- Load your laundry into the machine and put detergent in the relevant compartment of the soap drawer.

- Close the porthole door firmly.

- Select the most appropriate wash program for the garments that you are washing, by turning the program selection knob **(B)**.

- Select any program options by using the stain remover button **(H)**, extra rinse button **(I)**, cold wash button **(L)** or anti-crease button **(M)**.

- Any program option that you select, will affect the length of time that the wash cycle will take to complete.

- Alter the spin speed if required, using the spin speed selection button **(F).**

- You can then select the degree of dryness that you require by pressing the drying program selection button **(J)**.

Extra Dry: Recommended for towels, bathrobes and bulky loads.

Cupboard Dry: For items that can be put away without ironing.

Iron Dry: Leaves laundry suitable for ironing.

- If you wish, you can select a timed drying cycle by pressing the drying program selection button **(J)** and choosing from the times shown on the indicator lights. You can choose a 30, 60, 90 or 120 minute cycle.

- Press the Start / Pause button **(N)**.

- After approximately 5 seconds, you will hear your washing machine start the entire washing and drying cycle. The relevant program indicator light will remain on and the time remaining indicator will show the time left until the end of the program.

- At the end of the program, the STOP indicator light will come on. You should wait about 2 minutes for the door lock to be released. The door lock indicator light **(C)** will go out.

- Switch off the machine by turning the program selection knob **(B)** to the OFF position. Open the door and remove the laundry. Turn off the water tap.

- ***IMPORTANT: Never open the door after the drying cycle has begun. You should wait until the cool down period is completed.***

The washer dryer door

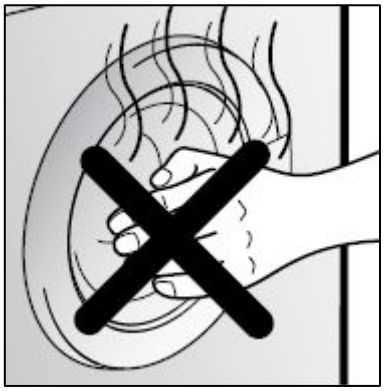

- The appliance door is fitted with a protective shield to prevent contact with the glass door which can reach high temperatures during the drying cycle.

- It should not be necessary to remove the shield from the machine during normal use.

- ***IMPORTANT: Do not touch the door for any reason during a drying cycle.***

Saving energy when using your washer dryer

- To prevent any possible waste of energy, water or detergent, we recommend that you put a full load in your washer dryer but without exceeding the recommended maximum load size. Up to 50% of energy saving can be made with one full load compared to two half load washes.

- Only use the cycles with a pre-wash for particularly dirty loads. Energy savings of 5% to 15% can be made by not selecting the pre-wash option for normal soiled laundry.

- Using stain removers before machine washing reduces the need to wash at temperatures over 60°C. Energy savings of up to 50% can be made by using a 60°C wash temperature rather than 90°C.

- Save energy and time by selecting a high spin speed to reduce the water content in laundry before using a drying program.

Automatic consumption reduction

- The washer dryer is fitted with an automatic consumption reduction system which enables the machine to use the amount of water needed to wash and rinse the laundry in relation to the particular load size.

- This results in a reduction in the amount of water used and electricity needed to heat it to the minimum temperature required without compromising the washing and rinsing performance in any way.

- The amount of water and electricity used will always be appropriate for the amount of laundry which ensures you achieve excellent washing results whilst respecting the environment and saving money.

Removing stains

Garments that are covered in stains, grease or are heavily soiled may need to be pre-washed or soaked before being placed inside of the washer dryer.

- Soaking helps to remove protein-type stains, like blood, milk or grass.

- Pre-washing helps to loosen soil before the main wash.

Stain removal rules

- Use warm water for soaking or pre-washing stained laundry. Hot water can set stains.
- Most stains are easier to remove when they are fresh.
- Before treating any stain try to establish; what kind of stain it is, how old the stain is, what the fabric type is and whether the fabric is colourfast (check the care label to find this out).
- Washing and drying can fix some stains.
- When bleach is recommended, use a mild fabric bleach that is safe for the fabric.
- If you need to use a stain remover, put the stained area face down on a paper towel or white cloth. Apply the stain remover to the back of the stain. This forces the stain off the fabric, instead of through it.

Stain removal guide

	Stain	***Removal Method***
	Alcoholic beverages	The stain should be first washed with cold water, then wiped with glycerine and water and rinsed with water mixed with vinegar.
	Shoe polish	The stain should be softly scratched without ruining the material, then rubbed with detergent and rinsed. In case it is not eliminated, rub with 1 unit of pure alcohol (96 degrees) mixed in 2 units of water and then washed with lukewarm water.
	Tea and coffee	Stretch the stained area of material on the top of a container and pour water as hot as the material can endure on it. If the type of material is suitable, wash it with lye.
	Chocolate and cocoa	Leave your clothes in cold water and rub with soap or detergent, wash it in the highest temperature that the material type can endure. If there is still a stain of oil left, wipe with oxygenated water (in proportion of 3%).
	Tomato paste	Scrape the dried pieces without ruining the material, then leave in cold water for about 30 minutes and wash by rubbing with detergent.
	Meat broth/ egg	Eliminate the dried stain residues and wipe with a sponge or soft cloth wetted in cold water. Rub with detergent and wash with diluted lye.
	Grease and oil stains	First wipe the residues. Rub the stain with detergent and then wash with lukewarm soapy water.
MUSTARD	Mustard	First apply glycerine to the stained area. Rub with detergent and then wash. If the stain still does not disappear, wipe with alcohol (on synthetic and coloured

		cloth, a mixture of 1 unit alcohol, 2 units water should be used).
	Blood stain	Lay your clothes in cold water for 30 minutes. If the stain still does not disappear, lay in mixture of water and ammonia (3 table-spoons of ammonia in 4 litres of water) for 30 minutes.
	Cream, ice-cream and milk	Lay your clothes in cold water and rub the stained area with detergent. If the stain has still not disappeared, apply lye on the fabric of your clothes in proper proportion. (***Do not use lye on coloured clothes***).
MOULD	Mould	Mould stains should be cleaned as soon as possible. The stain should be washed with detergent, and if it does not disappear, it should be wiped with oxygenated water (in proportion of 3%).
	Ink	Hold the stained area under cold water and wait until the inky water completely runs off. Then rub with water diluted with lemon juice and detergent. Wait five minutes and then wash.
	Fruit	Stretch the stained area of your clothes on the top part of a container and pour cold water on it. Do not pour hot water on the stain. Wipe with cold water and apply glycerine. Wait for 1-2 hours and rinse after wiping with a few drops of white vinegar.
	Grass stain	Rub the stained part with detergent. If the type of fabric is suitable for use of lye, wash it with lye. Rub your woollen clothes with alcohol (for coloured one, a mixture of 1 unit pure alcohol and 2 units of water).
	Oil paint	The stain should be eliminated before it dries by applying thinner on it. Then it should be rubbed with detergent and washed.
	Burnt stain	If your fabric is suitable for the use of lye, you can add lye into your washing water. For woollen fabrics, a cloth dampened in oxygenated water should be pressed on the stain and it should be ironed with a dry cloth on it. It should be washed after rinsing well.

Maintenance and cleaning

In daily use

- Once a wash cycle has completed, you should pull out the detergent drawer slightly, so it can dry out.

- Leave the porthole door ajar for a short while after a wash cycle has completed. This should help to prevent stagnant smells and to protect the door seal.

- Close the water tap.

- We suggest that you disconnect the appliance from your mains supply, when it is not in use.

Control panel and washer dryer cabinet.

IMPORTANT: *Do not use any abrasive cleaner or household polish on either the control panel or operating parts.*

- Wipe over the control panel and the external surface of the machine using a brand new damp cloth with warm water.

- If you ever spill any liquid detergent or conditioner from the detergent drawer onto the washer dryer cabinet, then these should be cleaned up immediately as they could be corrosive.

Detergent drawer

Occasionally the detergent drawer should be cleaned.

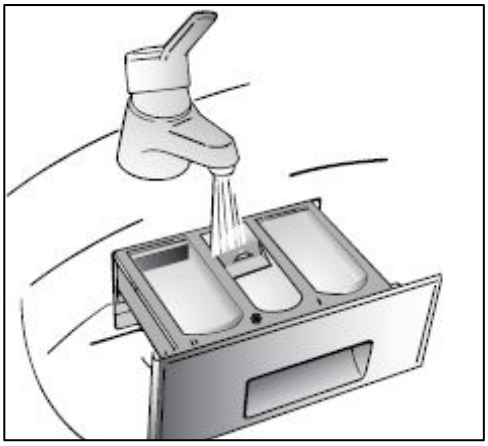

- Pull the detergent drawer out as far as it will go and then remove the drawer by pulling firmly.

- Use warm water and a brush to thoroughly clean the three compartments of the detergent drawer.

- Clean the area that the detergent drawer slides into with a brush.

- Replace the detergent drawer by placing it back into the slot. Then push the drawer fully back into position.

The washer dryer drum

The drum of your washer dryer is constructed from stainless steel. However if there are objects that can rust placed inside the drum, then it is possible for the drum to become stained.

IMPORTANT: *Do not use a descaling agent, iron/steel wool or scouring agents to clean the drum of your appliance.*

- Remove any rust stains on the drum with an appropriate stainless steel cleaning agent.

Door

- You should regularly check to see if any deposits have formed, or there are any foreign bodies in the rubber door gasket. This sits inside the opening of the porthole door.

- Regularly clean the door glass with a damp cloth. A build up of soiling and residues from the water can result in water leaking from the door.

90 degree maintenance wash

The warm and damp environment of a washer dryer can lead to a bacteria build up inside of the machine and in extreme cases you may even get a "sludge" like material building. To prevent this from happening, you should do the following:-

- Leave the door ajar for a few minutes after the wash cycle has completed.

- Once a month, set your appliance on a 90 degree wash.

- You should not put clothing inside the appliance for this maintainence wash.

- You should use a wash powder that contains a bleaching agent (i.e. not a wash powder that is only suitable for washing coloured garments).

Cleaning the filter

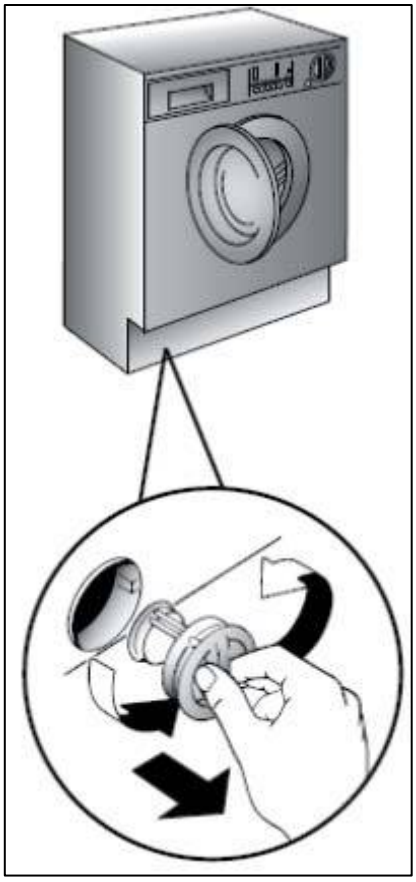

- The washing machine is fitted with a special filter for catching large deposits which could block the discharge hose such as coins, buttons etc… so they can be easily retrieved.

- Before removing the filter, it is recommended that you place a towel below the filter cap to collect any small amounts of water which are likely to be inside the pump.

- To remove the filter you should turn it anti-clockwise until it stops in the vertical position as shown in the diagram opposite. You can then remove and clean filter.

- After cleaning, replace the filter by turning the notch on the end of the filter in a clockwise direction.

Long periods of not in use

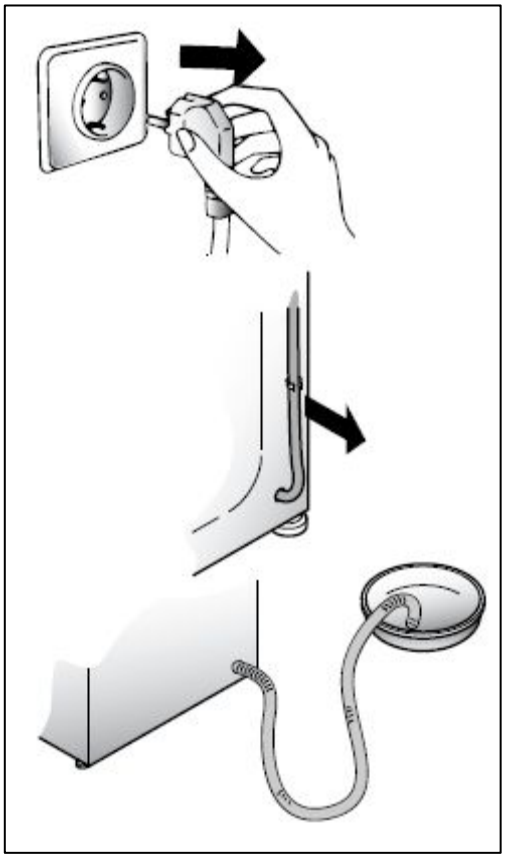

- If the appliances is being transported or is out of use for long periods in unheated places, all remaining water must be completely removed from the hoses.

- Ensure the mains power is off and then unclip the hose and point it downwards into a basin until all the water has emptied out.

General troubleshooting

If your appliance does not appear to be functioning correctly, please refer to the table below before calling the Customer Care Helpline.

Malfunction	***Cause***	***Solution***
Does not work on any program.	1) Plug not in socket. 2) Not switched on. 3) Power failure. 4) Fuse blown. 5) Door open.	1) Plug it in. 2) Switch it on. 3) Check. 4) Check. 5) Close door.
Does not fill with water.	1) See above. 2) Tap turned off. 3) Program selection knob not correctly positioned. 4) Fill hoses are kinked.	1) Check. 2) Turn tap on. 3) Position the program selection knob correctly. 4) Straighten the fill hoses.
Water does not drain away.	1) Kink in discharge hose. 2) House drain is blocked.	1) Straighten discharge hose. 2) Clean drain.
Water on floor around the washer dryer.	1) Leaking gasket between tap and water inlet hose. 2) House drain is blocked. 3) Soap drawer blocked with soap residues.	1) Replace gasket and tighten hose and tap well. 2) Clean drain. 3) Clean soap drawer.
Does not spin.	1) Water has not yet drained away. 2) “No Spin” selected.	1) Wait a few minutes for machine to empty. 2) Reset button to choose a spin speed.
Spinning starts late or the machine does not spin.	1) The imbalance control system has activated because the laundry is unevenly distributed in the drum. 2) If the laundry is still not evenly distributed after 10 minutes, the machine will not spin.	1) The appliance will redistribute the laundry by reversing the drum rotation. This may take several attempts before the laundry is evenly distributed and normal spinning can resume. 2) In the event of this, redistribute the load manually and select the program again.
Machine vibrates a lot during spin.	1) Washer dryer not completely level. 2) Transit brackets not removed yet. 3) Load not distributed evenly.	1) Adjust the adjustable feet. 2) Remove the transit brackets. 3) Rearrange the laundry evenly.
Door will not open.	1) Two minutes have not elapsed since the program finished.	1) Wait two minutes.
Spin speed increases.	1) During drying the drum will accelerate to a higher speed to distribute the load and optimise the	N/A

	drying performance.	
Machine makes a different noise when spinning.	1) The machine has a brush motor for better performance which causes this noise.	N/A
Only a small level of water can be seen in the drum.	1) New machines use less water yet achieve the same standard of washing and rinsing.	N/A

IF AN ENGINEER ATTENDS DURING THE GUARANTEE PERIOD AND FINDS THAT A FAULT HAS BEEN CAUSED BY AN ITEM IN THE TABLE ABOVE, WHICH COULD HAVE BEEN CLEARED BY THE CUSTOMER, THEN YOU MAY BE LIABLE FOR THE COST OF THE SERVICE CALL.

Poor wash results

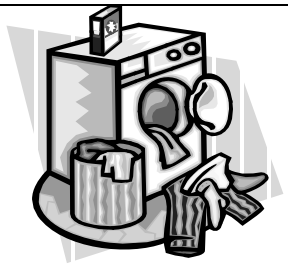

My garments are looking grey and there are limescale deposits present in the drum of my washing machine.

- There is not enough detergent being added.
- The incorrect detergent is being used.
- Stains are not being pre-treated.
- The correct wash program or wash temperature was not selected.

I have followed the advice given above, but my garments are still coming out with grey stains on them.

- The garments are soiled with oils, ointments or grease and were washed without enough detergent.
- The wash temperature selected was too low.
- Fabric conditioner has come into contact with the garments. If this happens try to wash out these stains as quickly as you can and try to avoid getting conditioner on the garments in the future.

After the final rinse, I can still see foam.

- Modern detergents can result in there still being foam in the final rinse. This does not mean that the washing is not being rinsed properly.

There is white residue on my garments when I remove them from the appliance.

- Modern detergents can contain insoluble contents, and white residue after a wash cycle is not necessarily a sign of the garments not being rinsed properly.

- You should shake out the garment or brush it off. In future possibly turn the garment inside out before it is washed. You may wish to move from a powder detergent and switch to a liquid detergent instead.

Installation

IMPORTANT: THIS INSTALLATION MUST BE COMPLETED BY A SUITABLY QUALIFIED PERSON. BAUMATIC ONLY SANCTION THE INSTALLATION GIVEN IN THIS INSTRUCTION MANUAL. YOU SHOULD KEEP THE TRANSIT PACKAGING, IN CASE YOU NEED TO TRANSPORT THE MACHINE IN THE FUTURE.

Unpacking the machine and removing the transit bolts

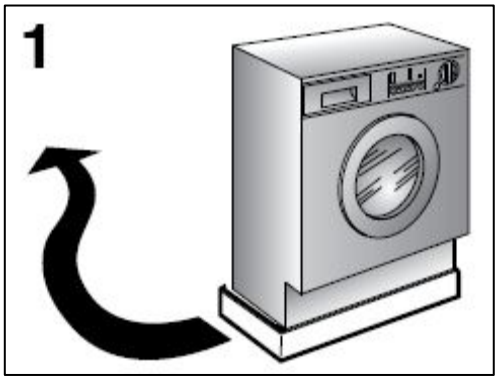

- Remove the polystyrene base and place the machine near its permanent position **(1)**.

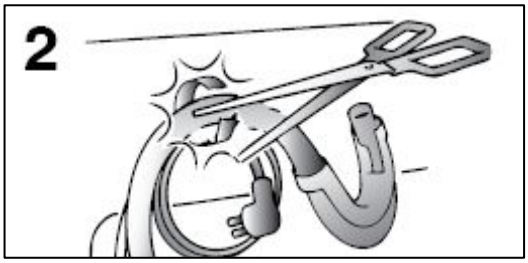

- Carefully cut through the hose retaining clip at the rear of the appliance, taking care not to cut the hose **(2)**.

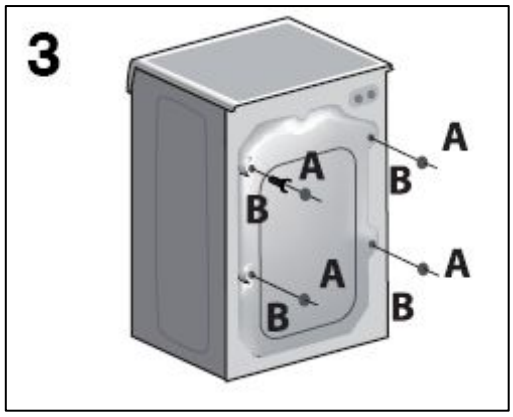

- Remove the 4 fixing screws **A** and remove the spacers **B (3)**.

- It is possible for the spacers to fall inside the machine so you should gentle tilt the appliance to remove these.

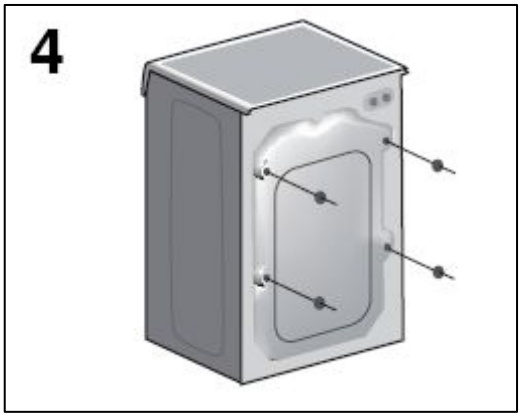

- Cover the 4 holes using the caps provided **(4)**.

- We recommend that you keep the transit bolts to immobilise the machine for future transit.

IMPORTANT: *The transit bolts* ***MUST*** *be removed before your washing machine is used for the first time.*

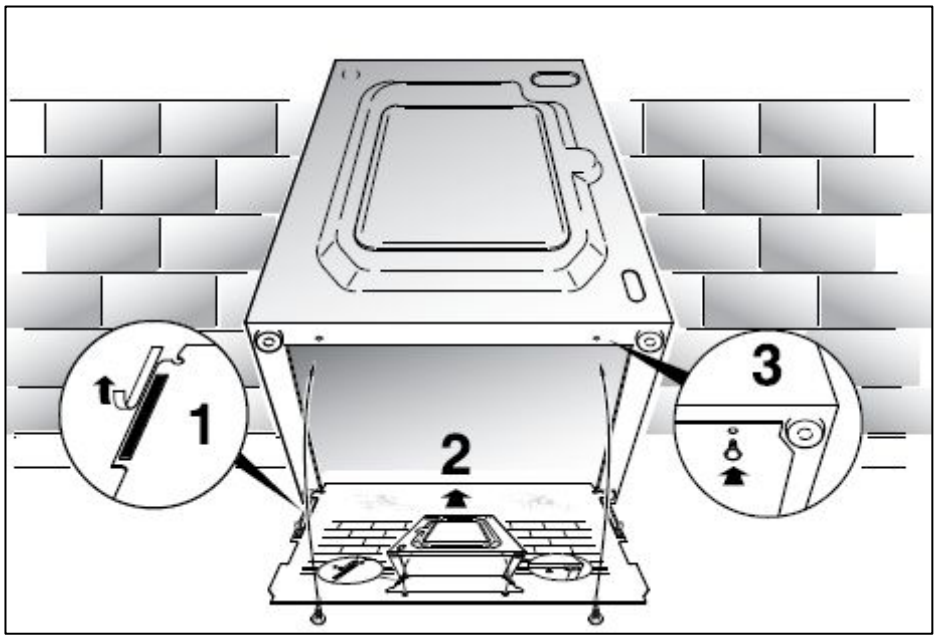

- Apply the insulation sheet or corrugated material to the base of the appliance as shown above.

- Peel back the sealing strips **(1)** and line the insulation sheet up with the base of the appliance **(2)**. Secure the sheet in place using the screws as shown **(3)**.

Positioning and levelling the appliance

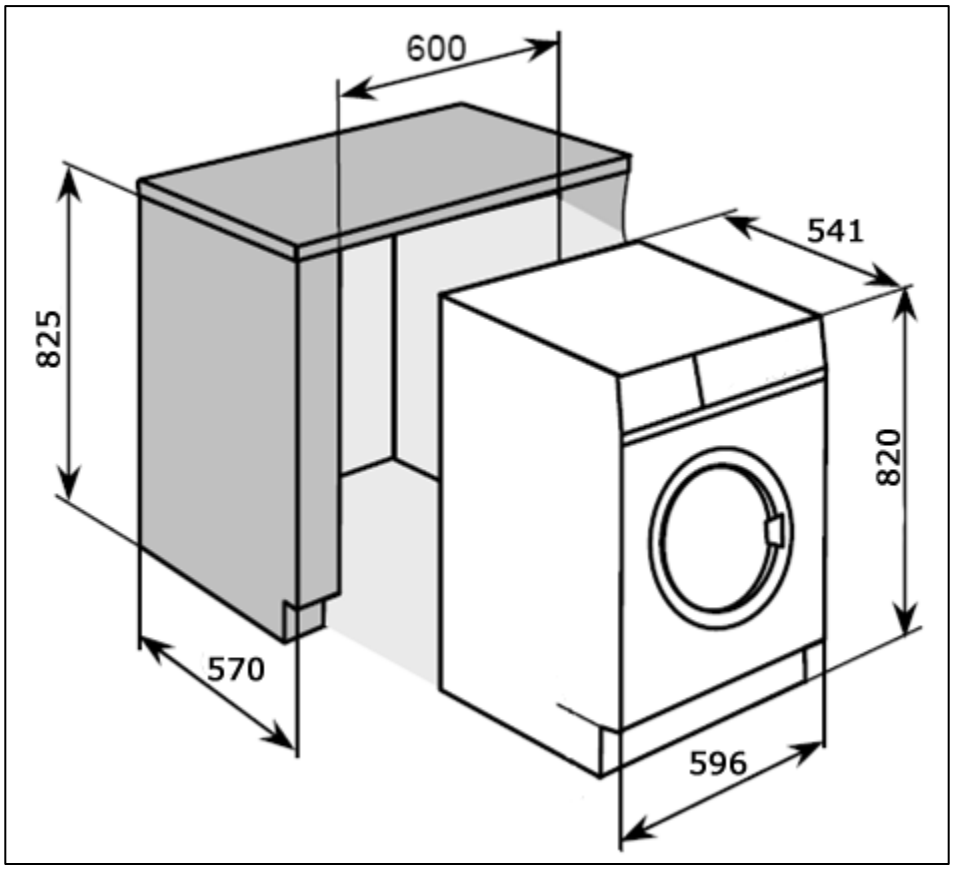

- The washer dryer requires an aperture of the size given in the diagram on the previous page.
- Place the washer dryer on a solid and level floor surface.
- ***DO NOT PLACE THE WASHING MACHINE ON A CARPET.***
- The feet are adjustable to level the appliance on an uneven floor surface. It is important that the feet are adjusted to ensure that the appliance is level. This is essential for quiet operation.

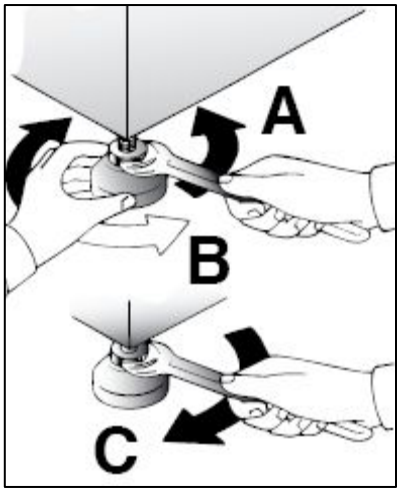

- Slacken off the lock nut on each of the washer dryer feet using a spanner **(A)**.
- Adjust the feet to level off the washer dryer **(B)**.
- Once levelled correctly, you should tighten the lock nut back up on each of the washer dryer feet using a spanner **(C).**

IMPORTANT: *When the washer dryer is positioned in the location where it will be used. Make sure that all four feet are resting firmly on the floor, by pressing down on each corner and checking that the appliance stands still.*

Fitting the décor door

- The front of the appliance has been drilled to accommodate the hinges to enable the door to be opened from the left or right hand side.

- The following instructions demonstrate how to fit a standard height décor door with dummy drawer.

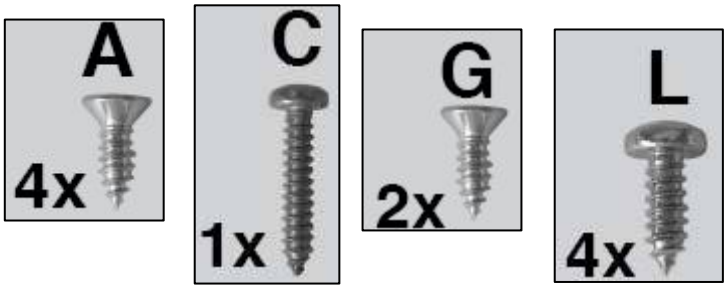

- You will need these screws to complete the fitting.

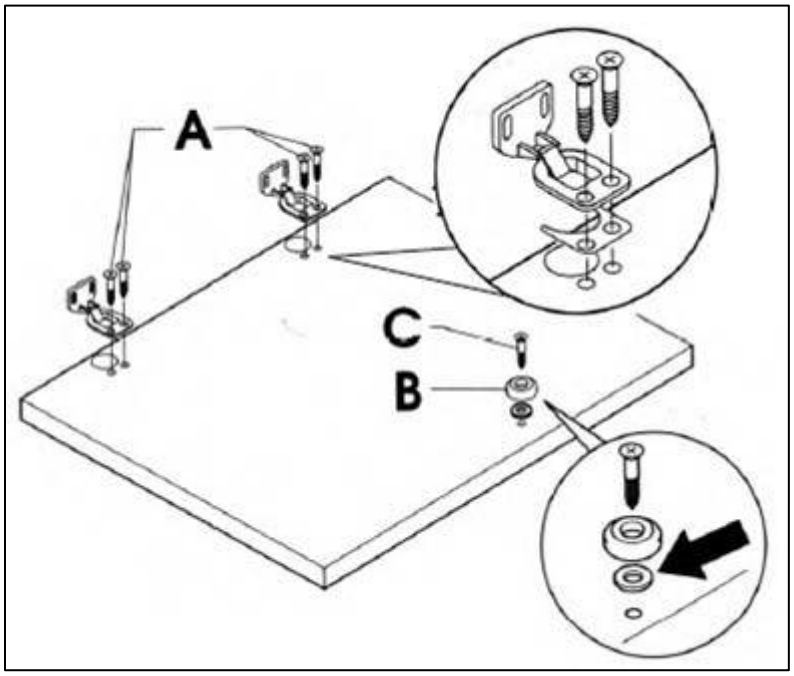

- Screw the hinges onto the décor door **(A)** then fasten the dummy drawer front to the top edge of the door. Ensure that the gap between the door and drawer front matches the units on either side.

- Fasten the magnetic catch **(B)** using screw **(C)** to the décor door.

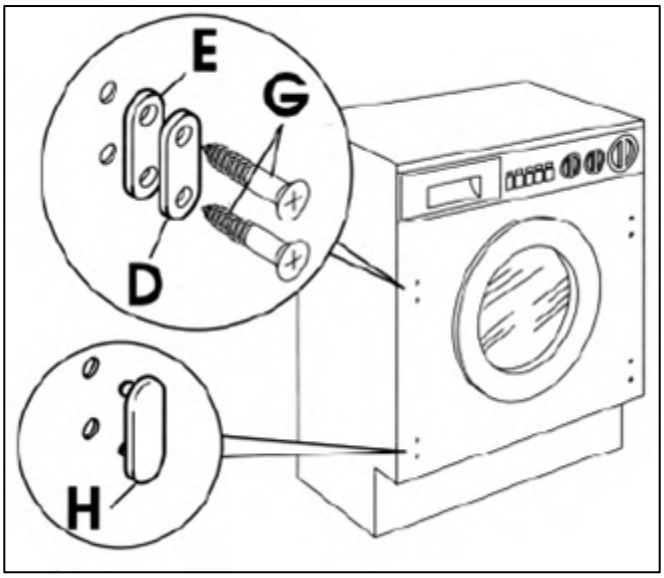

- Fasten the magnetic catch striker plate **(D)** to the front of the appliance, placing the rubber washer **(E)** under the plate and screw in place with screws **(G)**.

- Snap mount the plastic cover cap **(H)** into the lower hinge position.

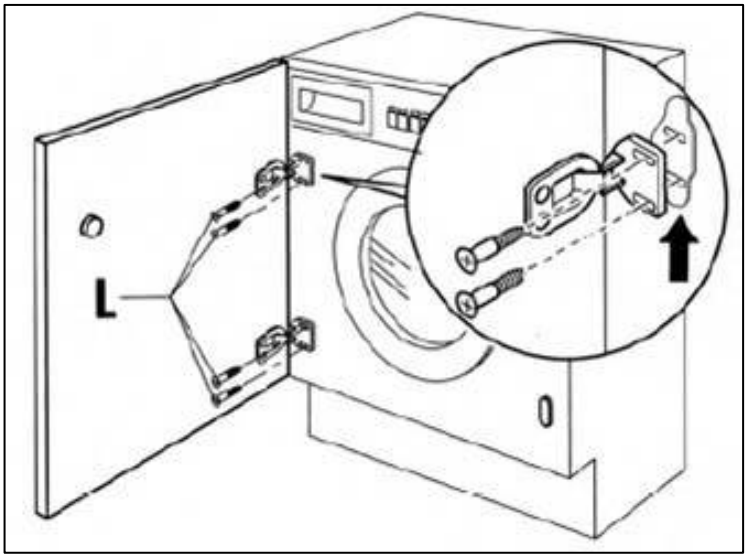

- Mount the door and hinges to the front of the appliance using screws **(L)**.

- ***IMPORTANT: It is recommended that, where possible, the décor door is hinged on the same side as the appliance door as this will give greater space to load and unload the washing.***

Connecting to the mains water supply

- Connect and fully tighten the inlet hose to the threaded inlet valve that is located at the rear of the washer dryer. You should connect the end with the right angle connector on it to the back of your appliance.

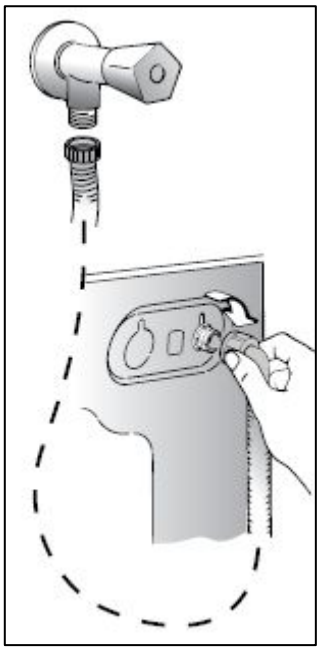

- Connect the other end of the inlet hose to your mains water supply. This machine only uses cold water therefore only one hose is needed to connect to the cold water supply. ***DO NOT CONNECT TO A HOT WATER SUPPLY.***

- Tighten the inlet hose to your mains supply fully.

- Test for any leaks.

Water outlet

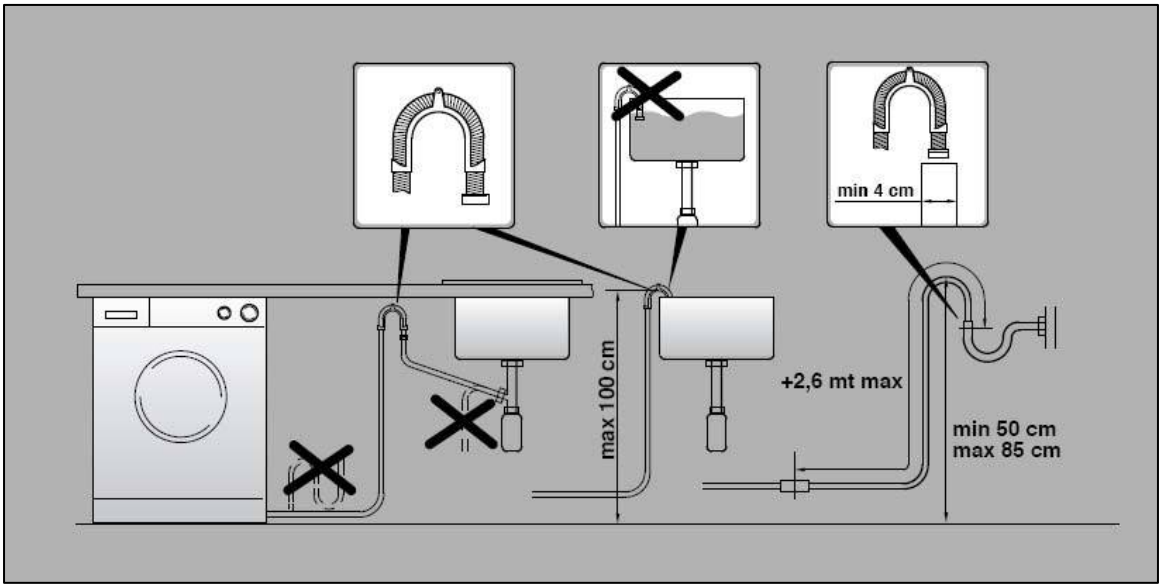

- Secure the drain hose, so that it cannot move whilst the washer dryer is in use.

- Place the end of the drain hose on your drain pipe. Push it a short way down into your drain pipe.

- ***IMPORTANT:*** *Do not insert the drain hose too deeply into the water pipe, as this may cause siphoning.*

- ***NEVER EXTEND THE DRAINAGE HOSE FROM ITS ORIGINAL LENGTH.***

- For the washer dryer to function properly, the end of the discharge hose must be at a minimum of 50 cm and a maximum of 85 cm from the ground.

Power supply

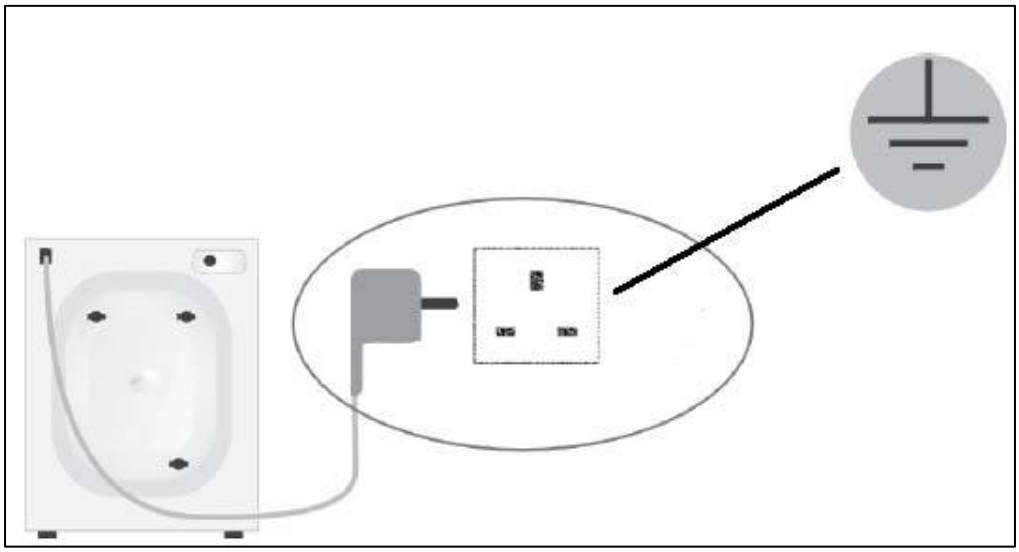

- ***IMPORTANT: As your appliance is a built in product, the electrical socket must still be accessible once the appliance is installed.***

- Consult the rating plate, located on the inner rim of the porthole door of the appliance ***BEFORE*** making the electrical connections. Ensure that the voltage reaching the plug is the same as that on the rating plate.

- ***DO NOT REMOVE THE RATING PLATE AS THE INFORMATION ON IT IS IMPORTANT.***

- The moulded plug that is supplied with the appliance must be placed into an earthed and insulated socket.

- Broken or damaged power leads must only be replaced by a suitably qualified person. A power lead of a similar type must be used in replacement.

- Power lead type – H 0 V V – F 3G 1,5.

- ***IMPORTANT:*** *We do not recommend that this appliance is connected to an extension lead.*

Before first use maintenance wash

- When your washer dryer has been correctly installed, we recommend that you perform a maintenance wash cycle.

- This will check that all aspects of the installation are correct; it will also remove any deposits that may have been left on the drum by the manufacturing process.

- Select the Cotton 90°C wash program.

- A small quantity of detergent should be used during this maintenance wash.

IMPORTANT: If your appliance appears not to be operating correctly, then you should disconnect it from your mains supply and then contact Baumatic Customer Care on telephone number (0118) 933 6911.

DO NOT ATTEMPT TO REPAIR THE APPLIANCE YOURSELF.

Please note that if an engineer is asked to attend whilst the product is under guarantee and finds that the problem is not the result of an appliance fault, then you may be liable for the cost of the call out charge.

The appliance must be accessible for the engineer to perform any necessary repair. If your appliance is installed in such a way that an engineer is concerned that damage will be caused to the appliance or your kitchen, then he will not complete a repair.

This includes situations where appliances have been tiled in, sealed in with sealant, have wooden obstructions placed in front of the appliance, like plinths. Or any installation other than the one specified by Baumatic Ltd. has been completed.

Please refer to the conditions of guarantee that appear on the warranty card that you receive with the appliance.

Baumatic Consumables

- **BC001** Degreaser for Dishwashers (200 g)
- **BC002** Descaler for Washing Machines and Dishwashers (200 g)
- **BC003** Ceramic Hob Cleaner (250 ml)
- **BC004** Oven Cleaner (250 ml)
- **BC005** Stainless Steel Cleaner and Protector (250 ml)
- **BC007** E-Cloth – General Purpose Cloth
- **BC008** Microwave Cover

To order a Baumatic consumable product please call 0123 5437 244 and quote the product code. You can also order online from eshop.baumatic.co.uk

United Kingdom
Baumatic Ltd.,
Baumatic Buildings,
6 Bennet Road,
Reading, Berkshire
RG2 0QX
United Kingdom

Sales Telephone
(0118) 933 6900
Sales Fax
(0118) 931 0035
Customer Care Telephone
(0118) 933 6911
Customer Care Fax
(0118) 986 9124
Spares Telephone
(01235) 437244
Advice Line Telephone
(0118) 933 6933

E-mail:
sales@baumatic.co.uk
customercare@baumatic.co.uk
spares@baumatic.co.uk
technical@baumatic.co.uk

Website:
www.baumatic.co.uk

Facebook:
www.facebook.com/baumatic.uk

Republic of Ireland

Service Telephone
1-890 812 724

Spares Telephone
091 756 771

Czech Republic
Baumatic CR s.r.o.
Lípová 665
460 01 Liberec 4
Czech Republic

+420 483 577 200

www.baumatic.cz

Slovakia
Baumatic Slovakia, s.r.o.
Galvániho 7/D
Slovakia

+421 255 640 618

Germany
Baumatic Gmbh
Bachstr.10-12
D-32 257 Bünde
Deutschland

+49 (0) 5223 99408 0

www.baumatic.de

Italy
Baumatic Italia S.R.L.
Via Galvani N.3
35011 Campodarsego (PD)

+3904 9920 2297

www.baumatic.it

Holland
Baumatic Benelux B.V.
Dukdalfweg 15d
1332 BH ALMERE
Nederland

+31(0)36 549 1553

www.baumatic.nl

www.baumatic.com